Stormwater and Flood Mitigation Engineering Design Services

Concept Design Report

Purchase Order No. 20171260-00

AECOM Project Number: 60533093

May 2, 2017

Prepared for:

City of Annapolis
Department of Public Works
Engineering and Construction
145 Gorman Street, 2nd Floor
Annapolis, MD 21401

Prepared by:

AECOM
12420 Milestone Center Drive
Suite 150
Germantown, MD 20876
USA

T: +1 (301) 820 3000
F: +1 (301) 820 3009
aecom.com

Consulting Architects:

Wheeler Goodman Masek
One Annapolis Street
Suite 100
Annapolis, MD 21401

T: +1 (410) 263 6787
wgm-arch.com

Copyright © 2017 by AECOM

All rights reserved. No part of this copyrighted work may be reproduced, distributed, or transmitted in any form or by any means without the prior written permission of AECOM.

Table of Contents

1. Introduction 1
2. Existing Conditions 1
2.1 Environmental, Historical, and Cultural Resources 1
2.2 Notable Features 2
2.3 Tide and Sea Level Change Investigation 2
2.4 Existing Utilities 4
2.5 Storm Drain System 4
3. Proposed Conditions 7
3.1 Overview of Proposed Project 7
3.2 Grading Modifications 8
3.3 Storm Drain Improvements 9
3.3.1 Localized Drainage Collector System 9
3.3.2 Pump Station Bypass 10
3.3.3 Backflow Preventers 10
3.4 Pump Stations 11
3.4.1 Service Area 11
3.4.2 Location 11
3.4.3 Pumps 12
3.4.3.1 Pumping Station Configurations 12
3.4.3.2 Station Approach 13
3.4.3.3 Number of Pumps 14
3.4.3.4 Type of Pump 14
3.4.3.5 Pump Installation 15
3.4.3.6 Service Life of Pumps 15
3.4.3.7 Operating and Maintenance Schedule 15
3.4.3.8 Electrical Design Criteria 15
3.4.4 Wet Well Structures 17
3.4.4.1 Sizing 17
3.4.4.2 Head Loss Calculations and Pump Duty Points 18
3.4.4.3 Station Design 19
3.4.4.4 Wet Well Construction 20
3.4.5 Control Station 20
4. Project Considerations 21
4.1 Critical Area and Environmental Permitting Requirements 21
4.2 View Corridors and Design Approach 23
4.2.1 View Corridors 23
4.2.2 Pump Station Buildings 27
4.2.2.1 Functional Parameters 27
4.2.2.2 Design Approach 28
4.3 City of Annapolis HPC Guidelines and Applicable Codes 35
4.3.1 Historic Preservation Commission Guidelines 35
4.3.2 Regulatory/Code Compliance 36
4.4 Construction Phasing 37
4.5 Estimated Cost 39

Figures

Figure 1: City Dock, Annapolis, MD 1
Figure 2: Dock Street Flooding at Elev. 2.5 feet NAVD88 3
Figure 3: Nuisance Flooding at Compromise and Newman Streets 3
Figure 4: Relative Sea Level Change Projections, Gage 8575512 Annapolis, MD 4
Figure 5: Drainage Area Map 5
Figure 6: Existing Storm Drain System during High Tide 6
Figure 7: Existing Storm Drain System during Extreme High Tide 6
Figure 8: Proposed Concept Design Schematic 8
Figure 9: Proposed Storm Drain Realignment 9
Figure 10: Drainage Area to North and South Pump Stations 10
Figure 11: CheckMate® UltraFlex™ In-Line Check Valve 11
Figure 12: Column Pump with Open Discharge (Flygt) 13
Figure 13: Column Pump with Pipe Discharge (Flygt) 13
Figure 14: Approach to the Intake of the Pumps (Flygt) 13
Figure 15: Flygt Submersible Electric Pumps 14
Figure 16: View Corridors and Aesthetic Implications of Proposed Aboveground Control Building Locations 24
Figure 17: North Station Control Building Proposed Location – Existing Conditions 25
Figure 18: South Station Control Building Proposed Location – Existing Conditions 26
Figure 19: Control Building Proposed Locations 27
Figure 20: North Control Building Overhead View 28
Figure 21: North Control Building Transverse Section 29
Figure 22: North Control Building View from the Southeast 30
Figure 23: North Control Building View from the Northeast 30
Figure 24: South Control Building Overhead View 32
Figure 25: South Control Building Transverse Section 33
Figure 26: South Control Building View from the Northeast 34
Figure 27: South Control Building View from the South 34
Figure 28: General Construction Sequence 37

Tables

Table 1: Sea Level Change in Feet NAVD88 4
Table 2: North Pump Station Wet Well Sizing 18
Table 3: South Pump Station Wet Well Sizing 18

Appendices

Appendix A Calculations
Appendix B Schematic Plan Sheets
Appendix C Cost Estimates

1. Introduction

City Dock is an area located in the downtown historic district of the City of Annapolis that serves as an economic and tourist hub for the city (Figure 1). Located within the boundaries of the Colonial Annapolis Historic District, the area of City Dock was deemed a National Historic Landmark. Adjacent to City Dock is the United States Naval Academy, which is also a designated National Historic Landmark.

One of the key features of this area is Market Slip which connects to Spa Creek. During high tides, City Dock experiences nuisance flooding, which inhibits tourism and business activities. In 2009, there were nearly 60 reports of water on the roads and sidewalks, and 54 events in 2010 of standing water on the roads. In 2014, the National Oceanic and Atmospheric Administration (NOAA) released a report titled, “Sea Level Rise and Nuisance Flood Frequency Changes Around the United States,” which identified Annapolis as the most significantly impacted city in America, with a predicted 925 percent increase from 2.8 events per year (1957-1963) to 39 events per year (2007-2013).

During these nuisance flooding events, tide water travels up the storm drain systems adjacent to City Dock, submerges underground storm drainage systems, and eventually comes out of drainage structures and onto the streets. High tides also overtop the existing bulkhead at areas along Market Slip, which results in overland flooding of nearby streets and businesses. Coupled with projected sea level rise, flooding events in the City of Annapolis are expected to continue to increase in frequency and severity.

The City of Annapolis is developing plans to deal with flooding at City Dock in a phased approach. The first phase seeks to mitigate nuisance flooding caused by high tide flowing upstream through the existing storm drain system and onto low points along adjacent streets. The next phase of the City’s flood mitigation strategy will seek to protect this area from larger storm events and eventual sea level rise.

Figure 1: City Dock, Annapolis, MD
(Image Courtesy of ESRI)

2. Existing Conditions

2.1 Environmental, Historical, and Cultural Resources

On June 23, 1965, City Dock was identified as a National Historic Landmark, and on June 19, 1975, it was added to the National Register of Historic Places. City Dock officially became a part of the Annapolis Historic District on September 29, 1984, when boundaries for the Historic District were redefined.

Oversight by the Annapolis Historic Preservation Commission (HPC) ensures that City Dock maintains its historical essence. New developments are reviewed by the HPC and critiqued based on adherence to guidelines set forth by the Annapolis Historic Preservation Commission's *Building in the Fourth Century – Annapolis Historic District Design Manual* (Design Manual) (2011).

Market Slip, which is bordered on three sides by City Dock, is a tributary to Spa Creek, which makes both bodies of water tidal tributaries to the Chesapeake Bay. City Dock is located within the 1,000-foot Chesapeake Bay Critical Area, which has an abundance of natural resources that include wetlands, rivers/streams, and forests. Those resources provide numerous ecosystem services and lifestyle and economic benefits to the communities within the Chesapeake Bay Critical Area, including water and air purification, flood protection, food production, recreational opportunities, and aesthetic value.

In addition to being the Capital of the state of Maryland, Annapolis hosts the country's largest and oldest in-water boat shows, which are staged at Market Slip between the months of April and October every year. These boat shows are a major contributor to the city's tourism industry. Adjacent to City Dock is the historic United States Naval Academy, which also benefits area businesses.

2.2 Notable Features

An existing bulkhead serves as the boundary between City Dock and Market Slip. The height of this bulkhead varies between elevation 1.5 feet and 4.9 feet North American Vertical Datum of 1988 (NAVD88). Because the elevation is not consistent along Market Slip, some areas are more prone to nuisance flooding than others. For example, the height of the existing bulkhead is approximately 1.5 feet NAVD88 at Newman Street, which is lower than the 1.9-foot elevation NAVD88 at which nuisance flooding through the storm drain system has been observed to begin. A key feature of City Dock is the Alex Haley memorial statues at the beginning of Market Slip (Dinghy Dock); this area is also susceptible to nuisance flooding because the height of the existing bulkhead in this area is at elevation 1.8 feet NAVD88.

All the buildings around City Dock have defining characteristics with respect to American history and culture. Along the north side of Market Slip is the Harbormaster Building which is the office for the person who oversees the maintenance and uses of the docks on Market Slip.

2.3 Tide and Sea Level Change Investigation

The City of Annapolis experiences semi-diurnal tides. Semi-diurnal tides have two high tides and two low tides per lunar day, with typically one of the high tides being slightly higher than the other and one low tide being slightly lower than the other. These are known as higher high tide and lower low tide, respectively. Data from the NOAA Annapolis gage for all of 2016 indicate that the mean of all high tides (high and higher high) for 2016 was 0.80 foot NAVD88. AECOM coastal engineers also reviewed data for all high tides above the reported 1.90-foot NAVD88 elevation at which storm drains begin to back up ("Flood Mitigation Strategies For the City of Annapolis, MD: City Dock and Eastport Area", Whitney, Bailey, Cox & Magnani (WBCM), LLC, December 2012). This 1.90-foot NAVD88 elevation was surpassed 23 times in 2016, with the mean of these levels at 2.26 feet NAVD88.

Tidal records provided by City officials have shown high tides between 2.20 to 3.26 feet NAVD88 in the past 8 years (without the influence of a tropical storm or hurricane) that have caused significant flooding along Compromise and Dock Streets. AECOM used this information along with results from the WBCM 2012 report to recommend analysis of proposed mitigation measures commensurate with a current high tide elevation of 2.9 feet NAVD88. Figures 2 and 3 as shown below, illustrate flooding experienced in the project area.

Figure 2: Dock Street Flooding at Elev. 2.5 feet NAVD88

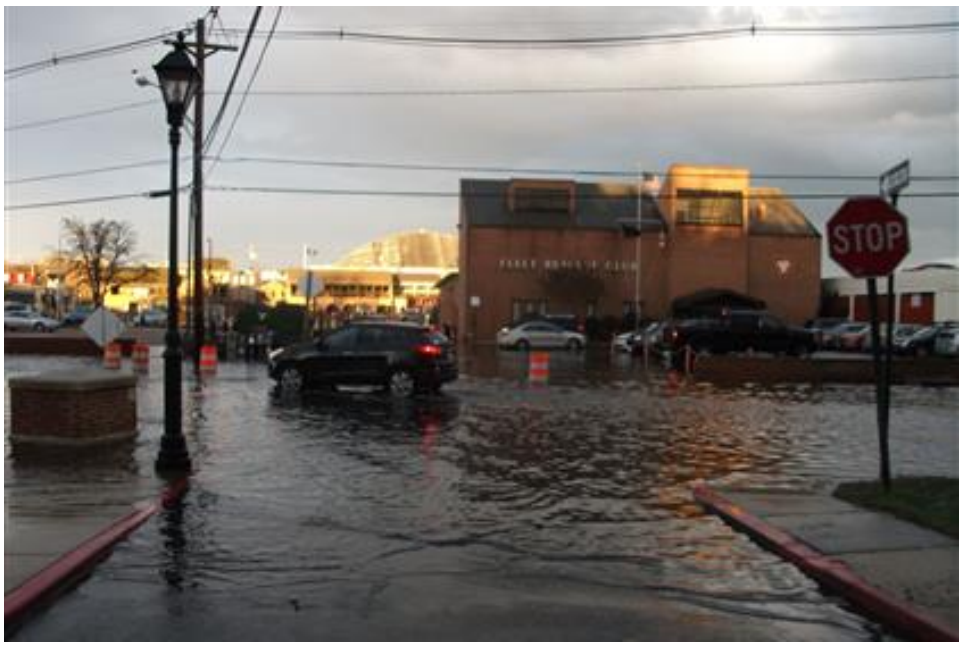

Figure 3: Nuisance Flooding at Compromise and Newman Streets

The Maryland Department of Natural Resources, the U.S. Army Corps of Engineers (USACE), and NOAA all predict a continuing rise in sea levels during this century, which would lead to more frequent floods and higher storm surges. This trend would be a continuation of the 1-foot rise in sea level along the Maryland coast during the past century. Figure 4 and Table 1 show the Local Relative Sea Level Change for Annapolis evaluated using the USACE Sea Level Change Curve Calculator. This tool calculates the curves for five different scenarios: USACE Low/NOAA Low, USACE Intermediate/NOAA Intermediate Low, NOAA Intermediate High, USACE High, and NOAA High.

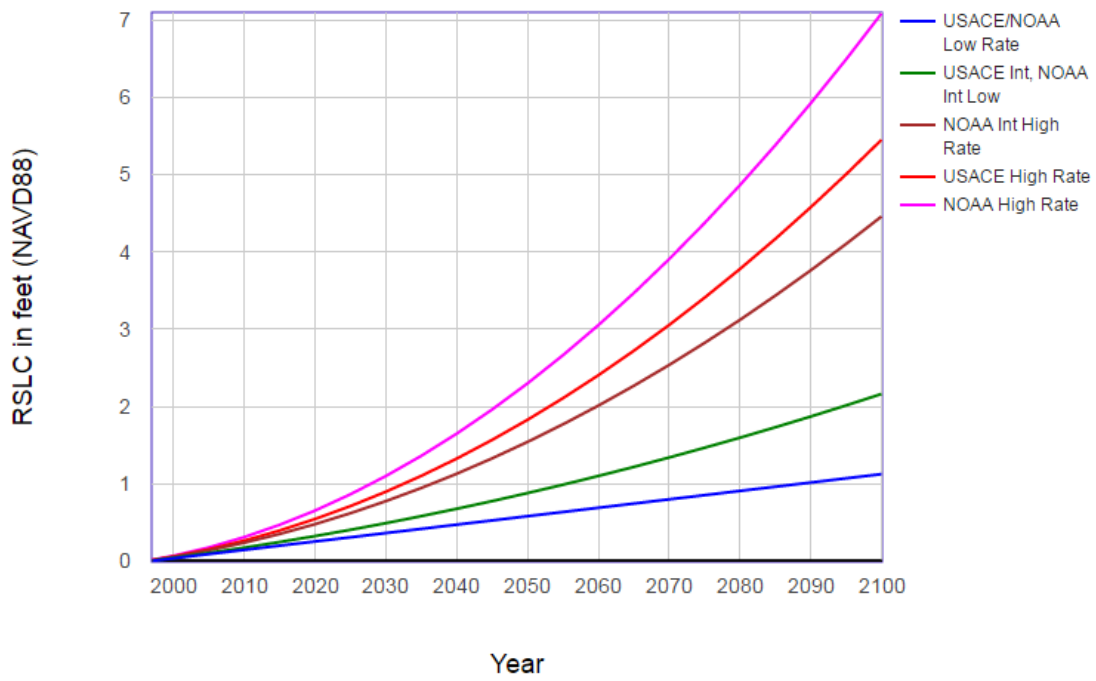

Figure 4: Relative Sea Level Change Projections, Gage 8575512 Annapolis, MD

Table 1: Sea Level Change in Feet NAVD88

8575512, Annapolis, MD NOAA's Regional Rate: 0.01089 foot/year					
Year	**USACE Low NOAA Low**	**USACE Int NOAA Int Low**	**NOAA Int High**	**USACE High**	**NOAA High**
2050	0.58	0.88	1.54	1.83	2.3
2075	0.85	1.47	2.82	3.41	4.37
2100	1.13	2.16	4.46	5.45	7.09

As previously noted, the current task order does not account for sea level change projections as shown above. Sea level change, in addition to larger storm events, will be addressed in subsequent flood mitigation phases by the City.

2.4 Existing Utilities

Based on available geographic information system (GIS) data and City-provided design plans, various underground utility lines and corresponding structures—water, sanitary sewers, and storm drains—were identified around City Dock. There are also electric, gas, and communication lines throughout the project area. Verizon and Comcast are two of the owners of the communication lines along City Dock. The Baltimore Gas and Electric (BGE) is the primary owner of the underground and overhead electric and gas lines.

2.5 Storm Drain System

A report prepared by Gannett Fleming and USACE for the City of Annapolis delineated a drainage area of approximately 90 acres of City Dock's eastern periphery that ultimately discharges into Market Slip through various storm drain systems. The drainage area is primarily east of Church Circle, south of King George Street, and north of Duke of Gloucester Street (Figure 5).

Figure 5: Drainage Area Map
(Image Courtesy of ESRI)

City Dock and its corresponding drainage area can be characterized as an urban environment with predominantly impervious ground cover. A significant contributor to nuisance flooding is seawater backing up through the storm drain outlets located around Market Slip. Since some of the storm drain outlet pipes discharge at elevations below normal tide elevations, downstream sections of the storm drain system become inundated by the high tides as represented in Figure 6.

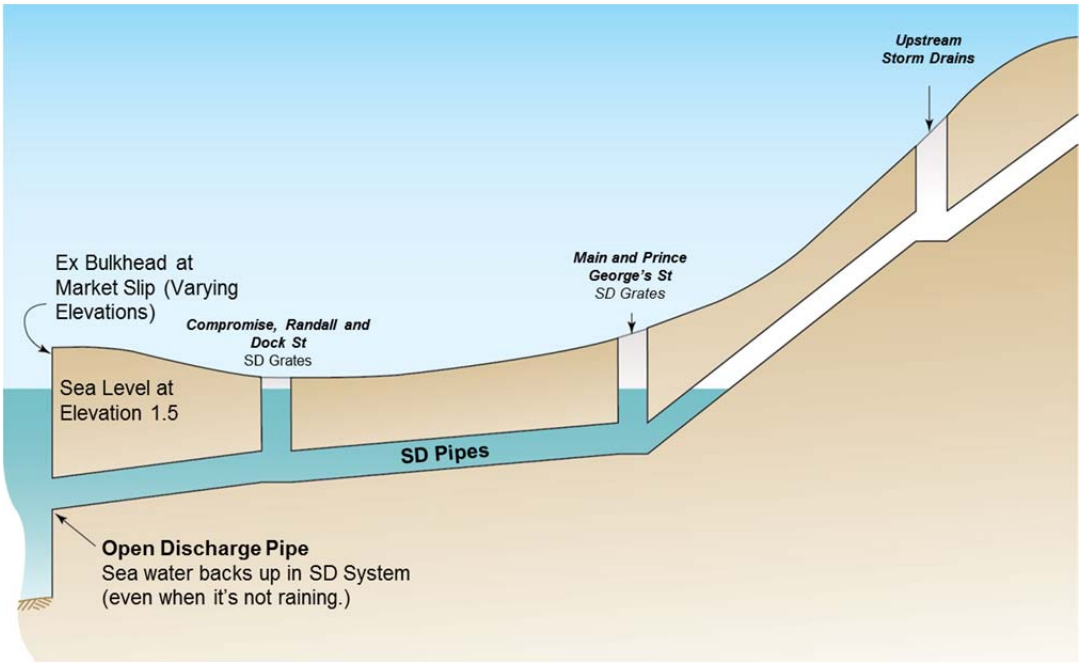

Figure 6: Existing Storm Drain System during High Tide

As tide levels increase, seawater begins to surcharge through the storm drain inlets at low points along City Dock; this situation is illustrated in Figure 7 and is most evident at the intersection of Compromise and Newman streets (Figure 3) as well as the City-owned parking lots along Dock Street (Figure 2). When high tide coincides with rain fall events, these areas experience major flooding, leading to damage to and within existing structures, closure of businesses, loss of tourism, and closure of emergency evacuation routes.

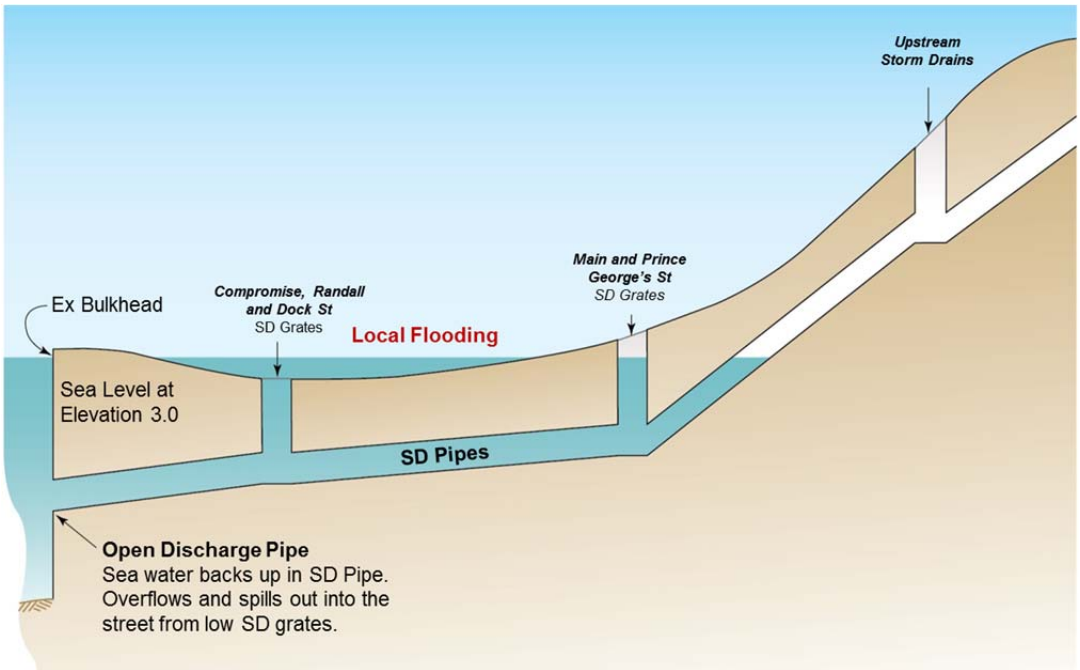

Figure 7: Existing Storm Drain System during Extreme High Tide

3. Proposed Conditions

3.1 Overview of Proposed Project

At the onset of this task order, the AECOM project team reviewed recommendations from previous studies, developed independent alternatives, and provided a comprehensive list of potential mitigation measures to reduce nuisance flooding. In a technical memorandum issued February 22, 2017, AECOM subject matter experts provided a summary of each alternative and made recommendations on specific mitigation measures to be analyzed further.

In discussions with City staff and stakeholders during a February 28 roundtable meeting, it was noted that there was not one stand-alone alternative that could solve all nuisance flooding concerns in the City. It was therefore decided that a combination of grading modifications at the existing bulkhead, closure valves, and smaller/multiple underground/aboveground pump stations would provide a flood mitigation system with resiliency and redundancy to meet the City goals. It was also clarified that, for the grading modifications at the existing bulkhead, the intent of this project is not to raise the existing bulkhead, but rather to provide a consistent level of protection throughout City Dock. This will mean raising certain low spots along the existing Dinghy Dock and Newman Street to be at a minimum elevation of 3.2 feet NAVD88.

The proposed concept is not only designed to manage nuisance flooding, but also projects into aspects of subsequent phases of the City's flood mitigation strategy. Investments the City makes as part of this project are intended to be scalable such that high-intensity events can also be managed by the same system with minimal modifications in the future. The proposed solution will create two parallel storm drain systems: one that collects flows from low-lying flood-prone areas and routes them to the new pump stations, and one that bypasses storm drain runoff from higher elevations directly into Market Slip. Segments of the existing storm drain in low-lying areas will be disconnected, realigned, and replaced to create the parallel systems. Additional segments of the existing storm drain system that will be used to convey runoff directly to Market Slip will be rendered watertight to reduce the chances of the runoff escaping onto the streets due to pressure.

In the low-lying areas, existing storm drain structures and corresponding pipes will be removed and replaced to convey collected runoff to the proposed underground pumping stations instead of the existing storm drain system. Because this is a gravity-driven system, routing flow from the low-lying areas to a single pump station would necessitate extremely deep excavations for the proposed system and would be impractical. Therefore, two underground pump stations are proposed to manage stormwater runoff from areas below an elevation of 5.0 feet NAVD88. A schematic of this proposed concept is shown in Figure 8. Backflow preventers will also need to be installed on the pump's discharge pipes, as well as on the outflows of the existing storm drain system, to discourage seawater from entering and reducing the capacity and efficiency of the proposed systems.

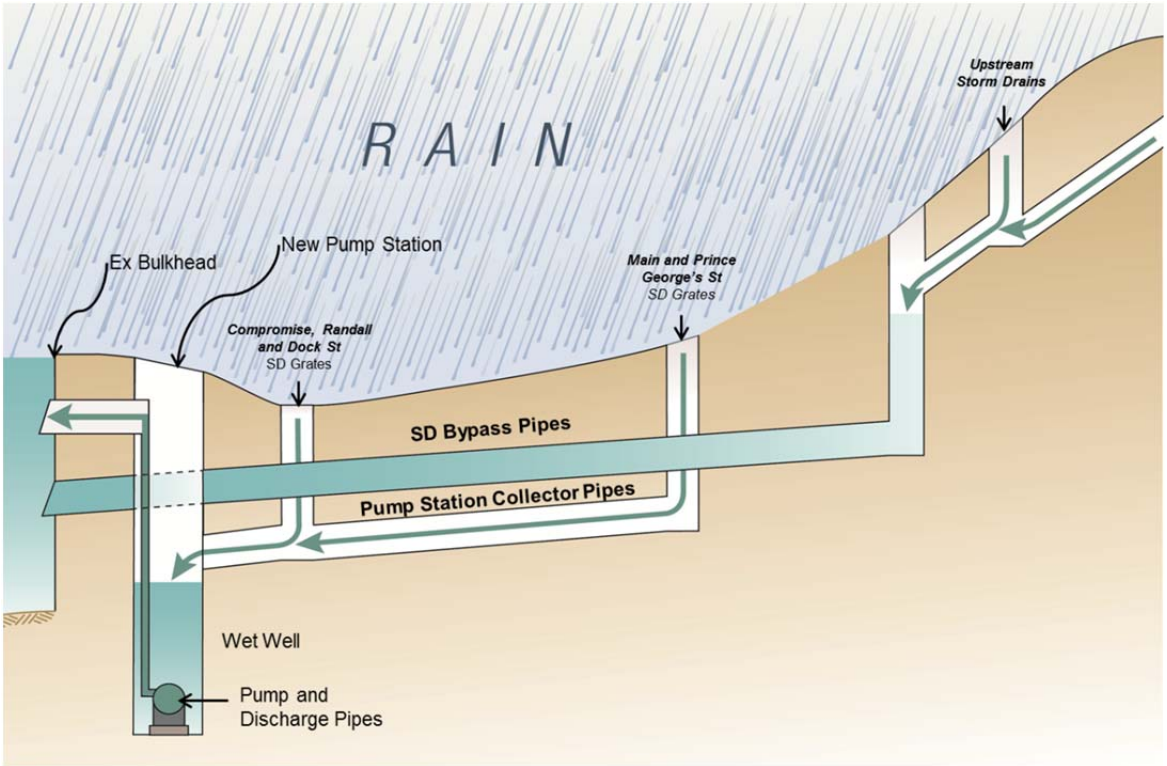

Figure 8: Proposed Concept Design Schematic

3.2 Grading Modifications

To prevent seawater from overtopping the existing bulkhead and initiating a constant loop where seawater gets into the low-lying storm drain system and overwhelms the proposed pump stations, low points along the existing bulkhead will need to be bolstered. A recent survey conducted by the City measured elevations along the existing bulkhead and boardwalks at Market Slip. To avoid disruption to private property and to maintain waterfront accessibility, it was decided that the boardwalk elevation in front of the Fleet Reserve Club serve as the benchmark for the entire bulkhead surrounding Market Slip. Therefore, a minimum elevation threshold of 3.2 feet NAVD88 was set. Two locations along Market Slip fell below this threshold: a section of the existing Dinghy Dock, and Newman Street adjacent the Fleet Reserve Club.

The brick-lined plaza at the existing Dinghy Dock is frequently submerged during high tide events. The plaza is enclosed from the north, west, and south by steps and knee walls keeping floods from encroaching upon Randall and Dock Streets. Typical elevations at the top of steps and knee walls surrounding this plaza range from 4.6 to 5.0 feet NAVD88. However, a handicap accessible ramp into the plaza from the south provides a route for tide water to extend into the sidewalk and onto Randall Street. Proposed grading modifications would reconstruct the Americans with Disabilities Act-compliant access ramp to be approximately 3 inches higher at its southern end. This would create a minimum elevation of 3.2 feet NAVD88 along the entire plaza and prevent tide water from encroaching upon the adjacent streets and inundating the low-lying storm drain system.

The second area requiring grading modification is along Newman Street, immediately west of the Fleet Reserve Club. The existing concrete bulkhead has an elevation of 3.43 feet NAVD88 at 110 Compromise Street. As the bulkhead continues east, it slopes down to an elevation of 1.5 feet NAVD88 at Newman Street before a noticeable step up to elevation 3.27 feet NAVD88 at the Fleet Reserve Club boardwalk. The proposed grading modification would raise the existing wall in-kind along the 110 Compromise Street development and Newman Street to achieve a minimum elevation of 3.2 feet NAVD88. Approximately 100 feet of the existing concrete wall along 110 Compromise Street and Newman Street will be affected.

3.3 Storm Drain Improvements

3.3.1 Localized Drainage Collector System

To provide adequate drainage of low-lying areas during rain events coinciding with the high tide, the existing storm drain systems will be modified to route flow to the two new pump stations. Existing storm drain structures at or below elevation 5.0 feet NAVD88 will be disconnected from the existing storm drain outfalls and redirected to new collector systems supplying the two new pump stations. The two new collection systems will be installed parallel to Dock and Compromise Streets for the north and south pump stations, respectively (refer to Figure 9).

Figure 9: Proposed Storm Drain Realignment
(Image Courtesy of ESRI)

Drainage from approximately 6 acres will be routed through the North Pump Station located adjacent the Harbormaster Building. Inlets from the corresponding areas shown on Figure 10 will collect runoff and direct it toward the wet well for the North Pump Station. Individual outfalls from existing inlets will be demolished to create a consolidated system. Although locations of the storm drain inlets will remain unchanged, the structures will be replaced to accommodate the new pipes and invert elevations. Refer to Appendix B (Schematic Plan Sheets) for a detailed view of site features to be demolished and replaced. Discharge from the South Pump Station will be through three parallel 48-inch-diameter steel pipes.

Figure 10: Drainage Area to North and South Pump Stations
(Image Courtesy of ESRI)

The second new pump station, located south of Market Slip, will serve approximately 23 acres as shown in Figure 10. As with the area serviced by the North Pump Station, existing inlets in this drainage area will be replaced and re-routed to a collection system paralleling Compromise Street. The alignment of the new collector system will mimic that of the existing pipes; however, the pipes will be replaced to handle the new flow patterns and capacity as dictated by the storm drain models. Discharge from the South Pump Station will be through three parallel 36-inch-diameter steel pipes.

3.3.2 Pump Station Bypass

To reduce the size of pumping stations needed to service the project area, a pump station bypass system is proposed to route runoff from higher elevations around the pump station and directly into Market Slip. Utilizing differential head, existing storm drain inlets above elevation 5.0 feet NAVD88 will be able to collect runoff and discharge into Market Slip without having to flow through the pump station. The bypass system will use existing storm drain infrastructure and discharge through outfalls already established at Market Slip. Sections of this system within low-lying elevations (below elevation 5.0 feet) will be made watertight to withstand hydraulic pressures. Existing pipes will be slip-lined, and manholes frames and covers will be bolted down to their respective structures. In conjunction with the new collector systems, the pump station bypass will relieve stress on the existing infrastructure and increase capacity of the individual systems, thus discouraging nuisance flooding caused by high tide.

3.3.3 Backflow Preventers

In-line check valves such as the one shown in Figure 11 will be installed in the pipes, near the outfalls, to permit flow in one direction and prevent seawater from entering the pipes and wet wells of the

underground pump stations. The outfalls of each pipe leaving the pump stations will be equipped with mesh screens at the outlet to prevent large debris from backflowing into the pipe and in-line check valve.

Similar check valves that will be installed in outfalls of the storm drain bypass systems to serve as backflow preventers. They will prevent seawater from entering and inundating the system. Only the collected stormwater runoff will be released from the bypass system during rain events. Sufficient head differential will be created in the system to force collected runoff to be discharged into Market Slip.

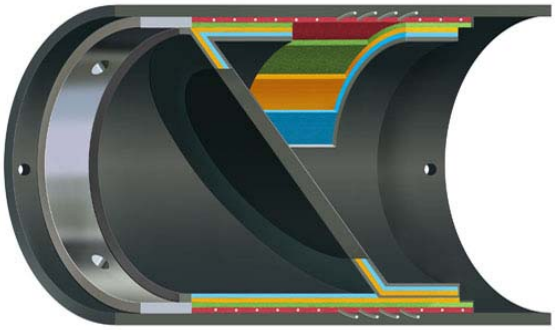

Figure 11: CheckMate® UltraFlex™ In-Line Check Valve
(Image Courtesy of TideFlex)

3.4 Pump Stations

3.4.1 Service Area

Underground pump stations will allow stormwater runoff to be discharged into Market Slip during storm events while alleviating stress on the existing storm drain systems. Two separate underground pump stations are being proposed to manage runoff for their separate, adjacent drainage areas; refer to Figure 10 to see the separation of the North and South Drainage Areas. The North Drainage Area includes Susan Campbell Park, Dock Street, the majority of the area south of East Street but north of Pinkney Street, and Randall Street, and is approximately 6.0 acres. The South Drainage Area, which is approximately 23 acres, consists of the area south of Pinkney Street and East Street, areas north of Duke of Gloucester Street, southeast of Green Street, and encompasses both Newman Street and Compromise Street.

3.4.2 Location

Due to limited City of Annapolis-owned property, desirable viewsheds to and from the Market Slip waterfront, and parking demands, the North Pump Station's proposed location is adjacent to the Harbormaster Building; this underground pump station will manage runoff from the drainage area along the north side of Market Slip. The pump's control building will be located immediately east of the building and the pump station itself will be due east of that, but underground. With-in the control building, the electrical equipment would need to be installed at an elevation above the base flood elevation.

With respect to the drainage area along the south side of Market Slip, there were iterations of the best location for this underground pump station. The Donner Lot, a small parking lot located at the intersection of Compromise Street and Main Street, had been recommended in prior studies completed for the City of Annapolis as a good location for the pump station because of its proximity to Market Slip. However, a new electrical system was recently installed at the Donner Lot to better service the annual boat shows, and the new underground electrical duct-banks may conflict with pump station components. AECOM was also informed by City of Annapolis officials that there is a strong possibility that the underlying soils in this area may be contaminated, which may complicate deep excavations and add expense. Another location that was considered for this pump station was at the parking lot on the north corner of the Compromise Street and Newman Street intersection. This location would have been ideal because it was on City-owned

property and is near Market Slip, but there are already plans for this space to be used by the annual boat show organizers as the grand entrance for the exhibition areas.

Ultimately, the proposed location for the South Pump Station is on the west corner of the Compromise Street and Newman Street intersection, at St Mary's Park. To minimize disruptions to the long-term functionality of the park, the pump station would be constructed under the basketball court, with maintenance hatches offset from the courts. The pump's control house would be located on the adjacent playground to the west of the basketball court. An added advantage is the higher grades at this location which position the sensitive electrical equipment above the base-flood elevation.

3.4.3 Pumps

Numerous factors were considered in the selection of the pumps for this project. First, AECOM considered the specific hydraulic phenomena that can adversely affect the performance of pumps when present to an excessive degree such as the following:

- Free-surface and submerged vortices
- Excessive pre-swirl of flow entering the pump and its variations with time
- Non-uniform distribution of velocity at the impeller eye and excessive variations in velocity with time
- Entrained air or gas bubbles

The negative impact of each of these phenomena on pump performance depends on speed and size, as well as other design features of the pump. In general, large high-speed pumps are more sensitive to adverse flow phenomena.

AECOM also considered typical symptoms of adverse hydraulic conditions, including the following:

- Reduced flow rate
- Reduction in developed head
- Increased power consumption
- Increased vibration and noise

It is recommended that the sump be designed to allow the pumps to achieve optimum hydraulic performance for all operating conditions. The acceptance criteria for the model test of the final design based on the Hydraulic Institute Standard recommendations are:

1. Free surface and sub-surface vortices entering the pump must be less severe than vortices with coherent (dye) cores (free surface vortices of Type 3 and sub-surface vortices of Type 2).
2. Dye core vortices may be acceptable only if they occur for less than 10% of the time or only for infrequent pump operating conditions.
3. Swirl angles, both the short-term (10- to 30-second model) maximum and long-term (10-minute model) average indicated by the swirl meter rotation, must be less than 5 degrees.
4. Maximum short-term (10- to 30-second model) swirl angles up to 7 degrees may be acceptable, only if they occur less than 10% of the time or for infrequent pump operating conditions. The swirl meter rotation should be reasonably steady, with no abrupt changes in direction when rotating near the maximum allowable rate (angle).
5. Time averaged velocities at points in the throat of the bell or at the pump suction in a piping system must be within 10% of the cross-sectional area average velocity. Time-varying fluctuations at a point must produce a standard deviation from the time-averaged signal of less than 10%.

3.4.3.1 Pumping Station Configurations

Figures 12 and 13 show two potential pump station configurations.

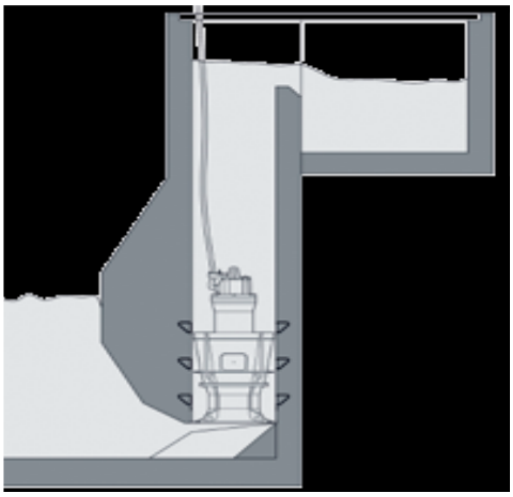

Column installation with open discharge:

1. The column can be concrete or steel tube. The pump is lowered into the tube, and the height of the intake is controlled by the water approach
2. Several pumps can be installed with similar configuration and adjacent to each other
3. The pumps can be lifted and reinstalled with ease

Figure 12: Column Pump with Open Discharge (Flygt)

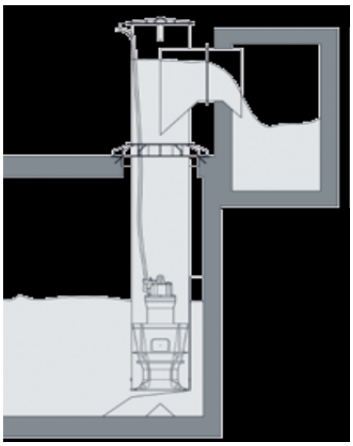

Column installation with pipe discharge into a culvert:

1. The advantages are the same as above
2. The discharge can be through a pipe into a culvert or a discharge pipe
3. The intake is similar to the one in Figure 12
4. The pump and motor can be lifted out of the column with minimal dismantling of the installation, providing ease of setup and repair
5. The station footprint is compact and unobtrusive or can be underground

Figure 13: Column Pump with Pipe Discharge (Flygt)

3.4.3.2 Station Approach

Figure 14 illustrates how the system would pipe into a pump station.

Station approach:

1. The entrance to the intake of the station may be from the side or front, depending on the layout
2. To suppress vortex formation and entrained air, the flow is forced under a beam
3. The approach to each pump may be isolated if required
4. Model testing can be used to refine the design configuration

Figure 14: Approach to the Intake of the Pumps (Flygt)

3.4.3.3 Number of Pumps

The ideal number of pumps within each pumping station is three. This number is based on the following criteria:

1. The number of pumps determines the size of the station and the capacity of the station; less than 3 pumps would not provide adequate redundancy
2. The capacity of the station is determined by the volume of rainfall to be pumped out for the 10-year storm and up to 100-year storm
3. One pump is unacceptable, as failure of the pump causes 100% loss in capacity and the size of the pump may be prohibitively large in some situations
4. Two pumps are acceptable as long as the pumps are oversized so that if one pump fails the second pump can provide the design capacity of the station
5. Three pumps are considered ideal based on the reliability, need for redundancy, and size of the pumps and station
6. Using more than three pumps would cause the size of the station to increase and also cause excessive maintenance costs and the need for the spare parts

3.4.3.4 Type of Pump

The basic requirement is that the pumping station be unobtrusive; therefore, an underground station was selected. A submersible electric pump (Figure 15) is ideal for this type of application and is easy to install and remove.

Figure 15: Flygt Submersible Electric Pumps

The pump consists of a pump bowl (an axial flow or mixed flow type) with the submersible electric motor close-coupled to it to make a single unit with the following advantages:

1. The unit is shipped preassembled so no field is assembly involved
2. The bearings, shaft, and insides of the pump are all shielded from the pumped fluid, ensuring a long, trouble-free operational life
3. The units are very compact and can be installed and removed from the wet well with minimal equipment
4. The power supply and controls can be located at a convenient distance from the wet well
5. The installation is very quiet, and noise levels are low compared other types of pumps and installations

6. The pump can be lowered into the tube and lifted out with a chain and hoist without dismantling the system piping and supports
7. The pumps are portable

3.4.3.5 Pump Installation

Flygt PL and LL pumps are typically installed in a vertical discharge tube on a support flange incorporated in the lower end of the tube. No anchoring is required because the weight of the pump is sufficient to keep it in place. The pumps are equipped with an anti-rotation gusset. This arrangement provides the simplest possible installation; the pump is just lowered into the discharge tube by hoist or crane. Retrieval of the pump is equally simple.

3.4.3.6 Service Life of Pumps

The expected service life of the selected pumps is 25 to 30 years. Because the application is flooding, the pumps are expected to operate less than 200 hours annually. The pump operating efficiency at the given operating head ranges is expected to be high. The cycling of the pumps would be controlled by the level sensors. The design of the station, wet well, and cycling of the pumps are based on the cycle time of 7.5 minutes. The generally recommended rate of cycle time is in the range of 5 to 30 minutes, depending on the size of the motor, with a higher horsepower (HP) motor requiring longer operating times due to heating issues, reducing the life of the motor. The motor sizes in this application would range between 50 and 75 HP based on the preliminary design and selection data. No operational detrimental effects are expected for this cycling time.

The pumps would be operated so that the total hours on each pump would be about the same by switching the lead and lag pumps. The lead pump would start as the water level in the wet well reaches the predetermined level. The other two pumps would come on if the water kept rising in the wet well. The three pumps would stay operational until the water levels started to drop, and the pumps would cease operations in the reverse order. These methods would lower the maintenance frequency and increase the service life.

Brackish salt water intrusion due to hurricane storm surge inundating the area and getting into the wet well can reduce the life of the pumps. However, by careful selection of the pumps and accessory materials, the effect can be minimized.

3.4.3.7 Operating and Maintenance Schedule

These stations would be designed to operate automatically based on the water level in the wet well during a storm event. No additional personnel would be required for the pump operation. In general, the operating and maintenance schedule over the service life is defined by the manufacturer, and the details are provided in the service manuals and maintenance schedules. This style of pump can generally be run dry, and there is no need for exercising as required in diesel applications. However, the manufacturer would provide operations and maintenance manuals detailing the requirements. The frequency of maintenance is tied to the operational hours of each pump, which are expected to be very low. The pump manufacturer’s recommendations would be followed for periodic maintenance. The pumps would ride on vertical rails and can be pulled with a rental crane. There may not be a need for a temporary pump during maintenance periods if it is carried out during the dry season. Therefore, in all probability, there may never be a need for temporary pumps. With the necessary spare parts in the inventory, and the closeness of the maintenance facility, the pumps could be put back into operation within a couple of weeks.

3.4.3.8 Electrical Design Criteria

Codes/Standards

- All electrical work will comply with the National Electrical Code (National Fire Protection Association [NFPA]-70).
- Hazardous areas in the stormwater pump stations will be classified in accordance with the Fire Protection in Wastewater Treatment and Collection Facilities (NFPA-820).

Electric Service

- Electrical service to the stormwater pump stations (North and South) will be provided by BGE. BGE will provide pad-mounted transformers adjacent to both pump stations. See Schematic Plan Sheets (Appendix B) for the proposed locations. The transformers will be placed above the base flood elevation.
- The electrical utility service voltage will be 480Y/277-volt, 3-phase, and 4-wire. The electrical services will terminate in a North Pump Station Control Building and a South Control Building. See attached one-line diagrams (Appendix B) depicting the distribution arrangements.

Standby Power

- A natural gas-fueled engine generator set will be located in both the North Pump Station Control Building and a South Control Building to provide standby power in the event of loss of BGE utility company power. The generator sets will be connected to utility breakers. Upon loss of the utility service, automatic controls will start the generator and activate transfer of power, thereby providing power to the stormwater pumps. Upon restoration of utility service, controls will automatically reverse the process.

Power Distribution

- Each Control Building will be provided with a 480-volt, 3-phase, 3-wire Motor Control Center (MCC). The MCCs will include:
  - Electronic metering reading volts, amps, kW, kVA, Hz, power factor, and energy usage
  - Transient Voltage Surge Suppressor
  - Solid-state reduced voltage motor starters for each stormwater pump
  - Feeder circuit breakers for heating, ventilation, and air conditioning loads and miscellaneous loads
- Small, dry-type, 480 – 208Y/120-volt transformers will provide 208-volt single/three-phase and 120-volt single-phase power for small process, mechanical, and receptacle loads.

Basic Materials

- Raceways and Conduit
  - Indoor and outdoor non-corrosive galvanized rigid steel
  - Underground: Schedule 40 PVC conduit, encased in concrete; 1-inch minimum size
- Wire and Cable
  - Service entrance, feeder, and motor circuit: Copper, single conductor, UL type THWN/THHN
  - Miscellaneous branch circuits: Copper, single conductor, UL type THWN/THHN; #12 AWG minimum
  - Control circuits: Copper, single conductor, UL type THWN/THHN; #14 AWG minimum
  - Instrumentation signal circuits: #16 AWG stranded, tinned copper; twisted pair or three conductor construction with 100 percent coverage aluminum polyester shield; #18 AWG shield drain wire
- Enclosures, Pull Boxes, etc.
  - Indoor areas: NEMA type 1 or type 12
  - Outdoors: Stainless steel, NEMA type 4X
- Supporting Materials
  - Indoor, finished areas: Galvanized or painted steel with corrosion-resistant hardware

  - Outdoors: Stainless steel with stainless steel straps and hardware

Miscellaneous Systems

- A security system will be provided in both the North Pump Station Control Building and South Control Building. The systems will consist of door switches and local alarm annunciating devices.
- A UL master label, lightning protection system will be specified for both the North Pump Station Control Building and South Control Building.

3.4.4 Wet Well Structures

3.4.4.1 Sizing

To avoid detracting from the viewshed, the wet wells were designed to be constructed almost entirely underground, with only the access hatches being visible above grade. The construction of the wet wells requires deep excavations, and expanding the size of the wet wells at a future date to accommodate additional flow would be very expensive compared to constructing them with excess capacity during initial construction. Therefore, the wet wells were designed to accommodate the flows from the 100-year storm event, even though the pumping capacity will only be designed to handle the 10-year storm for this first phase of work.

The key parameter in the sizing of the pump station wet wells was the volumetric capacity, or working volume, required to prevent excessive cycling of the pumps. Submersible pumps are immersed in water, which is an excellent heat sink that enables the motors to run with very short cycle times between starts and stops, typically as short as 5 minutes. For the conceptual design of the subject pump stations, a conservative 7.5-minute cycle time was selected to enable motor cooling. Based on the chosen cycle time and the inflow rate of runoff into each of the stations, the “working volume” of the wet well was determined.

The working volume is defined as the volume of water within the wet well between the high and low water levels, or the points at which the pumps are “on” and “off,” respectively. The wet well working volume is calculated as the internal surface area times the depth between the pump operating points. Due to the open space limitations at the two sites, the horizontal geometry, or footprint, of the stations was constrained. With fixed limits on the surface area, the depths of the stations were adjusted to provide sufficient working volume. At this stage of design, a conservative value of 15 feet was assumed as the wet well working depth for both stations.

Based on the established pump cycle time, wet well working volume, and working depth, the wet well surface area for each station was calculated. To ensure a smooth flow of water into the pump suctions, the criteria in “Mechanical and Electrical Design of Pumping Stations,” USACE EM 1110-2-3105, March 1994, were used to establish the width of each pump bay and dimensions of the bay walls, as well as the “L” baffle, which dissipates the influent flow energy. With the width of the bays and thus the overall width of each wet well established the lengths of the structures were then determined directly from the volume calculations. Assuming 1.5-foot-thick walls, the following are the dimensions of the wet wells: 32 feet x 26 feet for the North Pump Station and 39 feet x 29 feet for the South Pump Station.

The construction of the wet well structures is described in Section 4.4. To determine the overall construction area, 10 feet was added to each side of the wet wells for shoring and bracing, along with an additional 10 feet of clearance to the construction fencing. That results in a construction area of 52 feet x 46 feet for the North Pump Station and 59 feet x 49 feet for the South Pump Station. The basic calculations described above are shown in Tables 2 and 3 (calculations for wet well volumes and surface areas are shown for additional storm frequencies for information only).

Table 2: North Pump Station Wet Well Sizing

Assumed Pump Cycle Time:			7.5	min.		
Assumed Wet Well Working Depth:			15	ft	Wet Well Dimensions	
Storm Frequency (yrs)	Flow		Wet Well Volume (ft^3)	Wet Well Surf. Area (ft^2)	Based on USACE EM 1110-2-3105	
	gpm	cfs			Length (ft)	Width (ft)
2	22,792	51	5,713	381		
5	27,177	61	6,812	454		
10	30,328	68	7,602	507		
50	37,222	83	9,330	622		
100	40,103	89	10,053	670	29	23
With 1.5-foot thick walls:					**32**	**26**
Add 10 feet for Shoring + 10 feet for Clearance to Const. Fencing:					**52**	**46**

Table 3: South Pump Station Wet Well Sizing

Assumed Pump Cycle Time:			7.5	min.		
Assumed Wet Well Working Depth:			15	ft	Wet Well Dimensions	
Storm Frequency (yrs)	Flow		Wet Well Volume (ft^3)	Wet Well Surf. Area (ft^2)	Based on USACE EM 1110-2-3105	
	gpm	cfs			Length (ft)	Width (ft)
2	32,006	71	8,023	535		
5	38,169	85	9,568	638		
10	42,491	95	10,651	710		
50	51,930	116	13,017	868		
100	55,853	124	14,001	933	36	26
With 1.5-foot thick walls:					**39**	**29**
Add 10 feet for Shoring + 10 feet for Clearance to Const. Fencing:					**59**	**49**

3.4.4.2 Head Loss Calculations and Pump Duty Points

The pump duty point and horsepower requirements are determined based on the flow rate and the Total Dynamic Head (TDH) in the system. The TDH is a combination of the static head (or lift) plus the frictional head losses on both the suction and discharge sides of the pumps. The static head is the difference in elevation between the lowest water surface elevation in the wet well and the highest water surface elevation on the downstream side of the discharge pipe. The low water elevations are -15.0 feet for the North Pump Station and -13.0 feet for the North Pump Station. The highest water surface elevation on the downstream side (the tailwater elevation) is +2.9 feet, which occurs during high tide. Thus, the static head for the two stations are approximately 18 feet for the North Pump Station and 16 feet for the South Pump Station.

To determine the frictional head losses, the discharge pipe size must first be selected. The appropriate pipe size is highly dependent on the flow rate, which was calculated for each station based on the runoff from the 10-year storm event or its drainage area. The flow for three pumps operating at each of the stations is as follows:

- North Pump Station: Total flow = 30,328 gallons per minute (gpm); individual pump flow = 10,109 gpm
- South Pump Station: Total flow = 42,491 gpm; individual pump flow = 14,164 gpm

For a given flow rate, the smaller the pipe, the greater the frictional losses, and therefore the higher the TDH that the pump must be sized to pump against. From a cost perspective, a smaller pipe is less expensive than a larger one; however, that is counterbalanced against the higher price of a larger pump required to pump against a greater TDH.

There are also velocity limits to prevent deposition on the low end and erosion of the pipe material on the high end. A conservative criterion is to use a velocity between 3 feet per second (ft/s) and 10 ft/s. (Note: For this conceptual design, the assumption was made that each pump will have its own dedicated discharge line. Upon refinement of the design, it may prove more economical to construct a header system with three incoming lines and a single larger discharge line.) For the North Pump Station a 30-inch-diameter pipe was selected to convey the required 10,109 gpm, which results in a flow velocity of 6.88 ft/s. A 36-inch-diameter pipe was selected for the South Pump Station to convey 14,164 gpm at 6.70 ft/s.

The frictional head losses through both the discharge piping and the fittings in each system were calculated based on the respective flows, line sizes, and line lengths. The fittings for each line consist of a 90° bend, a check valve, and a concentric reducer. The final loss term is the exit loss, which represents the recovery of the kinetic energy into potential energy at the discharge of the system. Summing the static and dynamic head losses for the two pump stations yields the following operating conditions, or duty points, for each pump: North Station = 10,109 gpm at a 21-foot TDH; South Station = 14,164 gpm at a 20-foot TDH. Pumps for each station were then selected based on these points. The horsepower requirements, assuming a mechanical efficiency of 80%, were calculated as 69 HP for the North Station and 44 HP for the South Station. For conservative design, the corresponding pump motors selected were 100 HP and 75 HP, respectively. The above calculations are presented in the attached spreadsheets of Appendix A.

3.4.4.3 Station Design

Conceptual drawings of the Plan and Section views of the pump stations are attached as Appendix B. The following are a few items of interest to note:

1. The influent lines entering the stations are relatively high in the wet wells. To prevent splashing and entrainment of air into the flow-stream (which could cause cavitation damage to the pumps), a turn-down would be installed to place the discharge at least 2 feet below the low water level. The need for a turn-down may be eliminated in subsequent design phases by a combination of lowering the invert of the incoming pipe and reducing the operating range of the wet well by reducing the pump cycle time and/or using the upstream piping for storage volume.
2. The intake bell of the pump column requires a minimum submergence below the low water level and a minimum distance above the bottom of the wet well. That location has not been optimized.
3. The discharge lines are enlarged in the last 10 feet prior to going through the bulkhead to reduce the velocity of the exiting water. For the North Station, the line diameter increases from 30 inches to 42 inches, which reduces the velocity to 3.51 ft/s. For the South Station, the line diameter increases from 36 inches to 48 inches, which reduces the velocity to 3.77 ft/s. This was done to minimize the impact on vessels moving past the outfalls.
4. Internal check valves are installed at the discharge end of the lines. These valves prevent the backflow of seawater into the pumping system and subsequent potential flooding. Because the valves are internal to the pipe, they do not present a boating hazard, as opposed to a traditional steel flap gate valve, which would be a considerable obstacle to negotiate.

3.4.4.4 Wet Well Construction

Wet wells will be constructed with conventional construction techniques. A structural shoring system is required for each excavation. Each will consist of steel sheet piling shoring backed by two levels of steel walers, while the bottom level will be buttressed by a tremied concrete slab placed underwater prior to unwatering the interior. (Note that to unwater means to remove water without lowering the exterior groundwater table, as opposed to dewater, which means to remove water that may or may not result in lowering the groundwater table.) The steel walers in turn will be buttressed by at least one strut in each direction located at mid-span. Walers will be commercially available, heavy steel, wide flange shapes. Struts will be steel pipes. At the center of the excavation, where the pipe struts cross, there may be an internal support column.

It is anticipated that the wet wells will be soil-supported and not founded on piles. The base slab will be supported by the tremied concrete slab, which in turn will be supported by several feet of crushed stone placed on the earthen bottom of the excavation. Therefore, it is anticipated that the wet wells in both stations will require excavations approximately 30 feet deep. During construction and prior to backfilling, provisions must be made to dissipate hydrostatic uplift pressures against the bottom of the wet well.

The structure must be stable against uplift (heave), and the most economic design is to use backfill rather than tension anchors. Once the wet wells are constructed, heave will not be issue because the base slab of each wet well will have a ledge protruding approximately 2 feet beyond the wall exterior to support the weight of backfill placed on top. This weight will resist uplift when the wet well is empty but groundwater levels are near the ground surface.

The wet well will be constructed of cast-in-place reinforced concrete. It is anticipated that the base slab and walls will be 2 feet thick. Base slab thickness will be determined based on weight needed to achieve rigid body stability against flotation and will be reinforced for temperature and shrinkage requirements per “Code Requirements for Environmental Engineering Concrete Structures,” American Concrete Institute (ACI) 350-06. Additional wall elements will be needed structurally, either counterforts on the exterior of the wall and integral pilasters at the corners, horizontal “girdle” beams, or some combination thereof. The roof will likely be a combination of precast or cast-in-place support beams with a structurally composite cast-in-place cover. Beams will be laid out to frame the hatch openings in the roof.

In the wet well interior, divider walls separating the pump bays will be constructed. Their height will be a function of the hydraulic performance requirements of the pumps. These divider walls will also be designed to buttress the exterior wall on the discharge side of the wet well. Additional features include baffles for the pump influent discharge into the wells, and embedded steel components to support the pump and its piping and other miscellaneous embedded steel pieces.

The structural shoring system will require block-outs in the walls to be formed and the interior struts to be cut into pieces for removal. The walers are salvageable intact. Removal of the sheet piling is not recommended because removal will cause the adjacent ground to shift, which can lead to settlement and cracking of nearby structures and pavement.

The City should consider requiring the wells to be temporarily filled with water during construction to allow for any settlement that may occur if the subgrade at the bottom of the excavation consisting of fat clays with a high plasticity index. In this case, should the subgrade clays become desiccated, they would shrink and may result in instantaneous settlement of the wells when they are first filled with water. This in turn can cause problems with the pipe connections, so the preload should be done before connecting the pipes. If underlying soils do not have a high plasticity, this should not be a concern.

3.4.5 Control Station

The pump controls system will include Pump Control Panels (PCPs) at both the North and South Control Buildings. The instrumentation devices and components described below will include the operation and monitoring of the pump controls. The pumps will be controlled by a continuous level that senses transmitters and level floats.

The PCPs and their components will be UL labeled and fabricated to the standards of UL 508, and their construction will be in accordance with the requirements established by UL. The control panel will be suitable for 120V operation.

System Operation

- Programmable Logic Controller (PLC): The control panel will use a PLC to perform control, logic, sequencing, input/output (I/O) processing, and interfacing with the telemetry system.
- Programming: The vendor will program the PLC. The PLC application program will be fully annotated, including point tag numbers and descriptors, to aid in understanding the programmer's intentions. The vendor will also provide an electronic copy and a printed copy of the PLC application program.
- Field Device Interface: I/O for communication with field control devices and switches will be included. The vendor will provide at least two spare points for each type of I/O used and interposing relays for external interface discrete signals.
- Control Panel-Specific Surface-Mounted Devices: The panel will be furnished with the following front-of-panel-mounted devices:
  - Lead Pump Selector Switch: PUMP 1–PUMP 2–PUMP 3–AUTO ALT
  - Selector Switch for Each Pump: LOCAL-REMOTE
  - Indicator Light for Each Pump: RUN
  - Alarm Light for Each Pump: FAULT
  - Totalizer/Indicator for Each Pump: RUN TIME
  - Digital Indicator: WET WELL LEVEL
  - Alarm Light: HIGH LEVEL
  - Alarm Light: LOW LEVEL
  - Alarm Light: HIGH-HIGH LEVEL
  - Alarm Light: LOW-LOW LEVEL
  - Alarm Beacon: COMMON ALARM
  - Alarm Horn: COMMON ALARM
  - Momentary Pushbutton: HORN SILENCE
  - Momentary Pushbutton: TEST
  - Remote System Interface: (Future Telemetry)
- Outputs – Discrete:
  - RUN (each pump)
  - Common FAULT
  - Pump Station: HIGH-HIGH LEVEL
  - Pump Station: LOW-LOW LEVEL
  - Outputs – Continuous Pump Station LEVEL

4. Project Considerations

4.1 Critical Area and Environmental Permitting Requirements

AECOM senior environmental scientists conducted a desktop evaluation of available GIS data to identify the natural resources (Critical Area boundary, state and federal wetlands, federal navigable waters, rare,

threatened and endangered species, etc.) located adjacent to and within proximity of City Dock and its drainage area. The appropriate state and federal regulations were reviewed to determine which agencies had permitting and commenting authority, and AECOM held a pre-application meeting with the Maryland Department of the Environment (MDE) Tidal Wetlands Division, USACE, and the State Critical Area Commission (CAC) to discuss permitting and mitigation requirements for the proposed pump stations, storm drain realignments, and bulkhead modifications.

Wetlands and Waters

City Dock is located adjacent to, and the existing stormwater system drains into Market Slip, a state and federal regulated tidal water body which is a tributary to Spa Creek and the Chesapeake Bay. Activities associated with the construction of the pump station, stormwater drain realignments, and bulkhead modifications are regulated by MDE under the Maryland Tidal Wetlands Act, Environmental Article 16 of the Annotated Code of Maryland Regulations (COMAR) Title 26 Subtitle 21, Tidal Wetlands and Section 401 of the Clean Water Act, and regulated by the USACE under Section 404 of the Clean Water Act and Section 10 of the Rivers and Harbors Appropriations Act of 1899. Projects located within the Maryland Coastal Zone must also show consistency with the state's Coastal Zone Management Program as required by the Federal Coastal Zone Management Act of 1972, as amended by the Coastal Zone Act Reauthorization Amendments of 1990. An *Abbreviated Federal/State Joint Permit Application for the Alteration of any Tidal Wetland and or Tidal Waters in M*aryland must be submitted to MDE/USACE for review and authorization of any impacts proposed in state and federal tidal wetlands and waters and to certify that the proposed activities will be conducted in a manner consistent with the state's Coastal Zone Management Program. No mitigation is anticipated for impacts in Market Slip.

Rare, Threatened, and Endangered Species

A preliminary review for rare, threatened, and endangered species and species of special concern and critical habitats was conducted using available GIS data on the Maryland Environmental Resource and Land Information Network and the U.S. Fish and Wildlife Service (USFWS) Information, Planning, and Consultation (IPaC) database. No state or federally listed species were identified near the City Dock project area or within Market Slip. A review of the Maryland Department of Natural Resources (MD DNR) shellfish data layer shows Market Slip is included in the pre-2010 Severn River Oyster Sanctuary area, and the USFWS IPaC review shows 10 migratory bird species protected under the Migratory Bird Treaty Act of 1918 have been recorded near the project area. Prior to submitting a Joint Permit Application to MDE/USACE, project review letters will be submitted to MD DNR Environmental Review and Wildlife and Heritage units and the National Marine Fisheries Service requesting additional information on anadromous fish and other aquatic and terrestrial species and critical habitat, and an official USFWS species list will be obtained through IPaC. Based on the preliminary desktop evaluation, no adverse effects to rare, threatened, and endangered species and critical habitat are anticipated, but an in-water work time-of-year restriction may be included as a special condition of the federal and state wetlands and waterways authorizations.

Chesapeake Bay Critical Area

City Dock and the corresponding drainage area are located within the state Critical Area (CA) and the CA buffer. The CA extends 1,000 feet landward, as measured from mean high water line of state tidal waters, and the first 100 feet of the CA immediately adjacent to the mean high water line of state tidal waters is the CA buffer area. The CA buffer can be expanded if steep slopes, nontidal wetlands, hydric soils, and/or highly erodible soils are present. City Dock and its corresponding drainage area are located within the State CA and the 100-foot CA buffer area; an expanded buffer is not applicable in the City Dock area of Annapolis. Development within the CA and the 100-foot buffer are regulated by the CAC and local governments under the Critical Area Law, the Natural Resources Article Title 8 Annotated Code of Maryland, and regulated by COMAR Title 27 Subtitle 01, Criteria for Local Critical Area Program Development the Critical Area Commission. Activities associated with the construction of the pump stations, stormwater drain realignments, and bulkhead modifications are subject to these regulations. The CAC is notified of the work through a consistency report submitted on behalf of the City of Annapolis. Mitigation plantings will be required where pervious areas (vegetated) are disturbed within the 100-foot CA buffer. Disturbance of existing impervious surfaces (sidewalks, pavements, etc.) within the 100-foot CA buffer does not require mitigation.

4.2 View Corridors and Design Approach

4.2.1 View Corridors

The locations identified for the two pump stations are the Harbormaster Building site and the Newman Street Park site, labeled North Station and South Station, respectively. Although the pump stations themselves will be below grade, ancillary support structures that house electrical service and controls need to be located above grade and close to the pumps. Accommodations for the installation of future emergency generators at both stations are also being included. These aboveground structures are sited in a manner to minimize their adverse impact on the established view corridors in the Annapolis National Landmark Historic District, specifically:

North Station (Harbormaster Location)

- Main Street Corridor to City Dock
- Lower Main Street to City Dock
- City Dock to Harbormaster Building
- Market Slip (Water View) to Harbormaster Building
- Spa Creek (Water View) to Harbormaster Building

South Station (Newman Street Park Location)

- City Dock to Compromise Street
- Compromise Street to Newman Street Park, Southbound
- Compromise Street to Newman Street Park, Northbound
- Newman Street Park fronting Compromise Street
- Park fronting Newman Street
- Market Slip (Water View) to Newman Street Park

In the case of the North Station, the Harbormaster Building is an exposed site with all four elevations subject to public view, which makes the introduction of any new construction visible from some vantage point. The Newman Street Park, being slightly more concealed due to its recess off Compromise Street, exposes new construction only in head-on view behind existing fence enclosures at the basketball court. Figures 16 through 18 illustrate view corridors for the buildings.

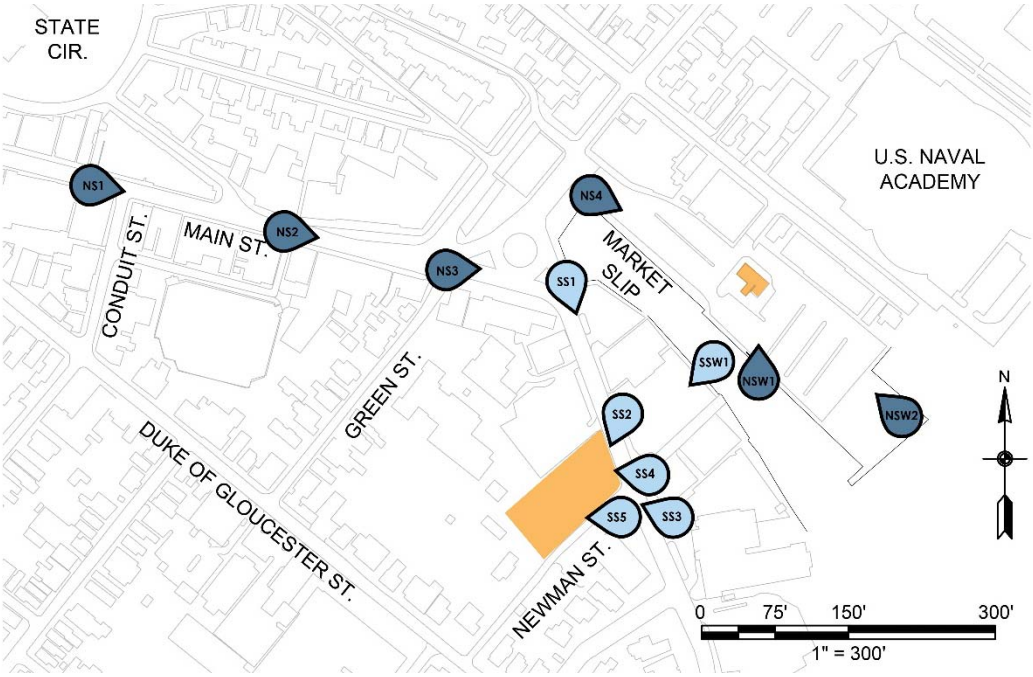

Figure 16: View Corridors and Aesthetic Implications of Proposed Aboveground Control Building Locations

NS1 VIEW DOWN MAIN ST. TOWARDS MARKET SLIP

NS2 VIEW DOWN MAIN ST. TOWARDS MARKET SLIP (CLOSER)

NS3 VIEW FROM GREEN ST. ACROSS MARKET SLIP

NS4 VIEW DOWN DOCK ST. ALONG MARKET SLIP (NORTH SIDE)

NSW1 VIEW FROM MARKET SLIP TOWARDS HARBOR MASTER

NSW2 VIEW FROM SUSAN CAMPBELL PARK TOWARDS HARBOR MASTER

Figure 17: North Station Control Building Proposed Location – Existing Conditions

SS1 VIEW DOWN COMPROMISE ST.
LOOKING SOUTH

SS2 VIEW ACROSS COMPROMISE ST.
TO CITY LOT (FROM NORTH WEST)

SS3 VIEW ACROSS COMPROMISE ST.
TO CITY LOT (FROM SOUTH WEST)

SS4 VIEW ACROSS COMPROMISE ST.
TO CITY LOT (FROM SOUTH WEST)

SS5 VIEW ACROSS NEWMAN ST.
TO CITY LOT

SSW1 VIEW ACROSS MARKET SLIP
TO CITY LOT

Figure 18: South Station Control Building Proposed Location – Existing Conditions

4.2.2 Pump Station Buildings

4.2.2.1 Functional Parameters

It is important to understand the function of the improvements being considered and their critical future role within the City's historic built environment before discussing the project's design approach. The improvements being proposed for this project are multi-faceted; the vast majority will be located subsurface (below grade) and thus will be largely out of sight. At each pump station location, the only above-grade improvement that will be visible to the public is the Control Building (see Figure 19). In general, the Control Building requirements can be summarized as follows:

- Will be a one-story structure housing the electrical switchgear and operational controls for the underground pumps
- Will have a standby natural gas-fired generator in a separate, sound-attenuated enclosure that will be integrated with the building
- Will be located close to the underground pump vaults
- Will be constructed of reinforced concrete and masonry to withstand the force of rising floodwater
- Will contain a secure enclosure for critical equipment, devoid of windows and with limited openings
- Will require adjacent vehicle access for routine and emergency maintenance of the equipment and generator
- Is not intended to be occupied
- The building's finished floor elevation must be 5.0 feet NAVD88 or higher
- The building's freeboard line will be 8.0 feet NAVD88
- The building's ceiling height will be 10 feet above finished floor elevation
- To the extent possible, civic enhancements/educational displays should be incorporated into the Control Building's exterior design

These functional parameters are the challenges that must be addressed when integrating the proposed designs into the City's urban and historic fabric.

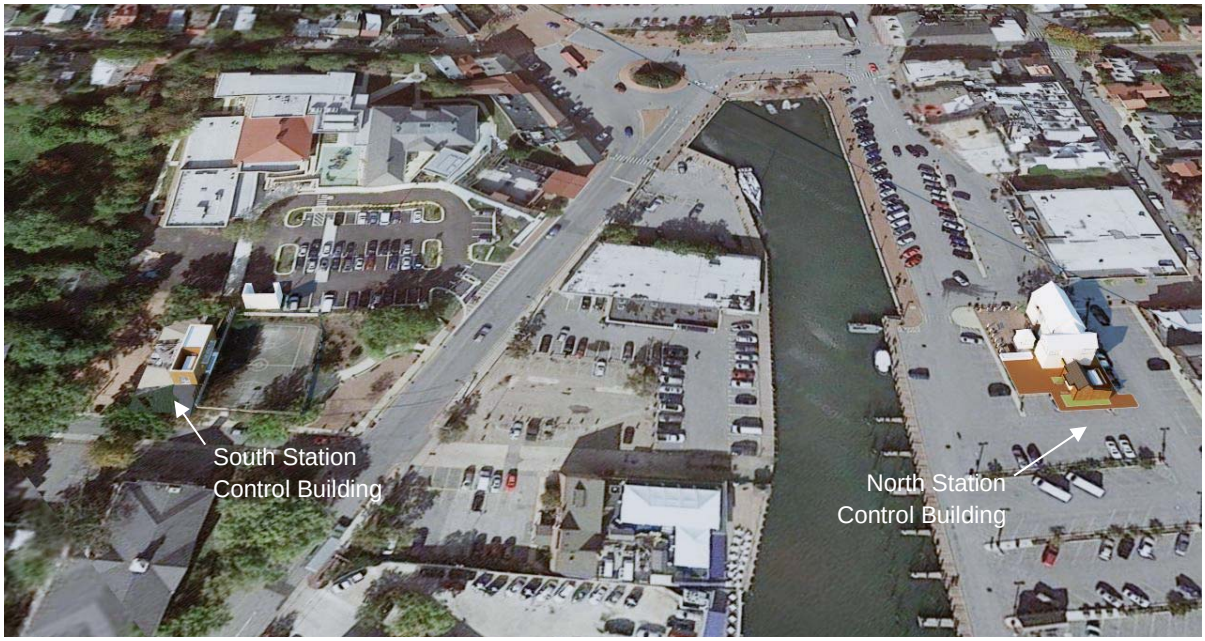

Figure 19: Control Building Proposed Locations

4.2.2.2 Design Approach

North Pump Station – Harbormaster Building Site

The proposed location of the North Pump Station is under the parking lot on the eastern edge of the existing Harbormaster Building (see Figure 20). Based on this location, the Control Building is proposed to be sited off the east-facing elevation of the Harbormaster Building in an area that currently includes brick paver hardscape, a landscape bed, and five surface parking spaces. The footprint of the new building will be 24 feet x 24 feet (576 square feet). The highest point of the roof will be 16 feet above grade. The new structure will be located 8 feet from the existing façade of the Harbormaster Building.

The project team took care in choosing the proposed site to respect the view corridors previously discussed. The placement of the new building at the eastern end of the 2½-story Harbormaster Building limits its visibility from a majority of the key land-based views. The new structure will be visible in water-based views from Market Slip and Spa Creek at a distance, but the presence of docked boats and parking lots in the foreground will obscure the views to some extent.

Figure 20: North Control Building Overhead View

The exterior design approach for this building draws on thematic stylistic influences of the adjacent Harbormaster Building to help integrate the new utility structure into the architectural fabric of City Dock. The original Harbormaster Building was constructed in 1975 based on a design by Robert Lamb Hart, Architect of New York City. A large addition to the east end of the Building, designed by Colimore-Clarke Associates of Annapolis, MD, was constructed in 1987. It is a modern design of its period that employed vernacular forms and proportions combined with traditional Annapolis materials of brick masonry with wood accents. Key architectural elements, such as the 10-in-12 roof pitch, roof material, brick pattern and color palette, and arched openings, are explored in the massing and articulation of the new control building. The exterior design approach is intended to be subordinate in its execution, in keeping with its role as an infrastructure building with no public access or use.

The portion of the building that will house electrical switchgear and operational controls is fully enclosed to meet both security and climate-control requirements. The standby generator will be placed within an open-roof, three-sided masonry enclosure. The generator will be installed above the freeboard datum, resulting in a maximum generator height of 10 feet above the finished floor elevation. The masonry wall enclosure combined with the architectural louver screen will conceal it from public view. Service access into the building will be from the 8-foot-wide service breezeway created along the existing Harbormaster Building. A portion of this breezeway will be covered with a low-profile roof, which will be the only physical connection between the two buildings. See Figure 21.

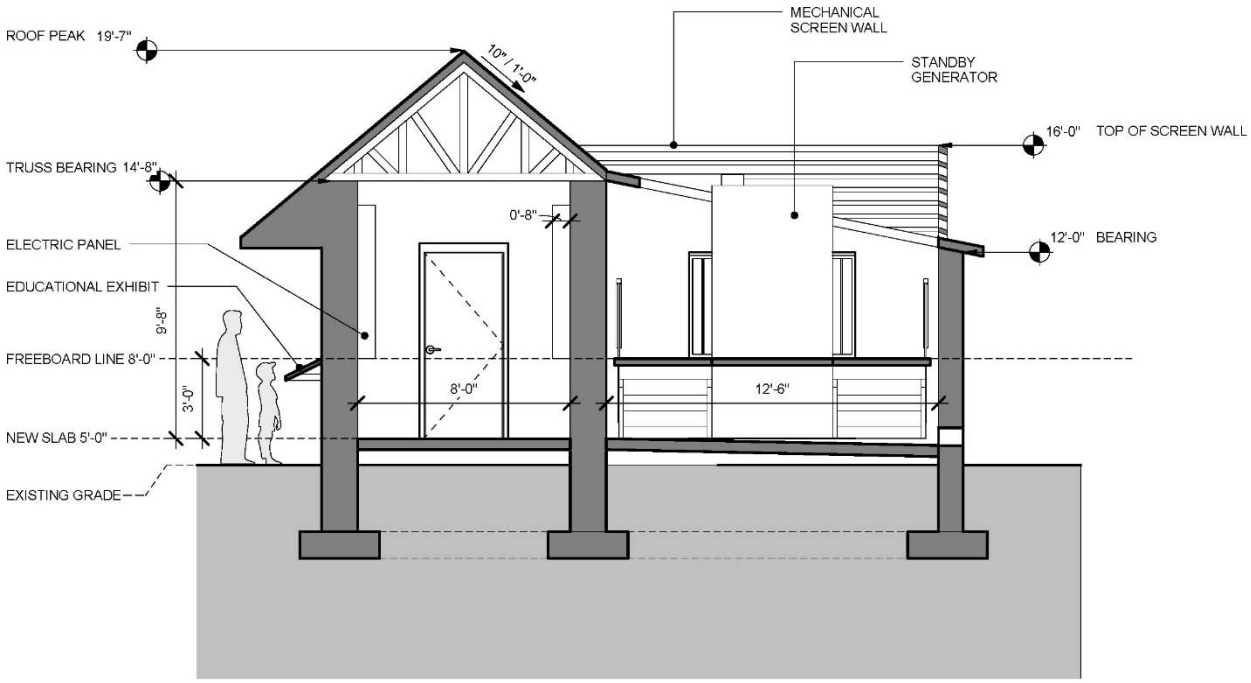

Figure 21: North Control Building Transverse Section

Lacking windows and other elements, the façade will employ a combination of recessed masonry niches housing vegetative arbors and a central public art/educational storyboard display to add visual interest and the necessary scale and proportion to the forward-facing elevation. The freeboard elevation will be emphasized by brick detailing and integrated into the educational storyboard as a visual representation of this key datum. Figures 22 and 23 show conceptual views of the North Control Building.

Figure 22: North Control Building View from the Southeast

Figure 23: North Control Building View from the Northeast

South Pump Station – Newman Street Park Site

The location of the South Pump Station will be under the existing basketball court at the Newman Street Park complex (Newman Street at Compromise Street). The court will be restored after construction of the pump vault is complete.

Based on this location, the Control Building will be sited along the outside of the western edge of the Court (see Figure 24). It will physically sit in a portion of the existing Annapolis City Playground dedicated in 1987 by then-Mayor Dennis Callahan. Currently the proposed site has three trees, a number of park benches, and a small playground structure. The playground structure will need to be relocated or resized.

To adapt to the limitations and opportunities of the site, the footprint of the new building will be 16 feet x 48 feet (768 square feet). The bigger footprint is necessitated by the larger equipment requirements for this pump station. The highest point of the roof will be 12 feet and 6 inches above grade on the playground side and 15 feet and 6 inches along the basketball court elevation. It will be located 4 feet from the existing face of the retaining wall separating the lower basketball court from the playground.

The proposed site was carefully selected to respect the view corridors along Compromise Street. For the most part, the placement of the new building at an interior location along the eastern edge of the playground overlooking the basketball court diminishes its visibility from land-based views. Water-based views only occur on an axis with Newman Street via the public right-of-way along the Fleet Reserve Club. This view is mostly obscured due to the presence of the basketball court fence and existing trees in the foreground.

The area surrounding the proposed site is primarily open (active and passive recreation uses and a surface parking lot), which limits the architectural context to what can be observed from Annapolis Elementary School, which underwent a major revitalization in 2013. A school outbuilding similar in height, length, and width to the Control Building is located on the property line adjacent to the playground and basketball court. Despite its mundane use, the structure was executed with care and merits serving as a design model for our proposed improvement.

Figure 24: South Control Building Overhead View

Key architectural elements, such as the height, brick pattern and color palette, precast coping, recessed masonry niches housing vegetative arbors, etc. will be explored in the massing and articulation of the new building. The exterior design is intended to be subordinate in its execution, in keeping with its role as an infrastructure building with no functional public access or use.

The portion of the building that will house the electrical switchgear and operational controls will be fully enclosed to meet security and climate-control requirements. The standby generator will be placed within an open-roof, three-sided masonry enclosure. The generator will be installed above the freeboard datum, resulting in a maximum generator height of 10 feet above the finished floor elevation. A masonry wall enclosure will conceal it from public view. Service access to the building will be from the 10-foot-wide x 24-foot-long paved space accessed from Newman Street. Figure 25 shows a diagram of the proposed South Control Building.

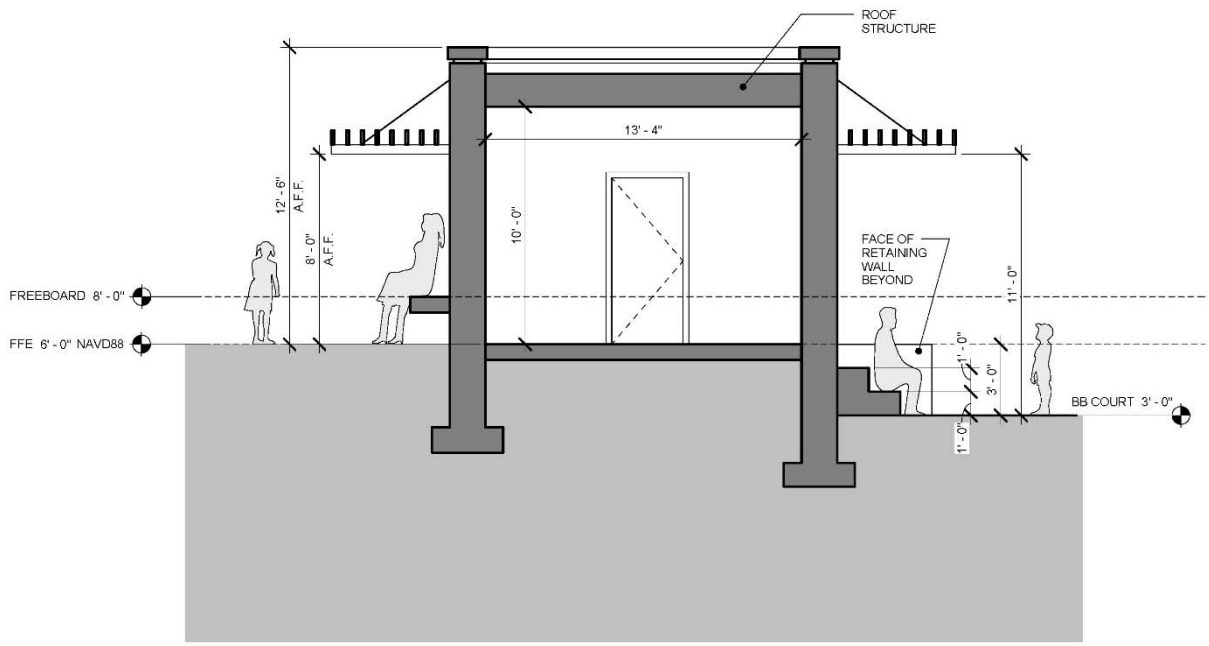

Figure 25: South Control Building Transverse Section

Lacking windows and other elements, the façade will employ a combination of recessed masonry niches housing vegetative arbors and a central public art/educational storyboard display to add visual interest and the necessary scale and proportion to the to both the east and west facing elevations. On the east elevation (basketball court), there is an opportunity to incorporate a civic enhancement into the building design by adding concrete seating areas and a large public art installation. Fixed seating under a trellis will be proposed along the west elevation (playground) façade, as well as interactive educational displays focusing primarily on young children to introduce playground users to the environmental issues of rising sea levels. The freeboard elevation will be emphasized by brick detailing and will be integrated into the educational storyboard as a visual representation of this key datum. Figures 26 and 27 show conceptual views of the South Control Building.

Figure 26: South Control Building View from the Northeast

Figure 27: South Control Building View from the South

4.3 City of Annapolis HPC Guidelines and Applicable Codes

4.3.1 Historic Preservation Commission Guidelines

The project is within the Annapolis Historic District and subject to review by the City of Annapolis HPC. The legal basis for the Annapolis Historic District regulations is the State of Maryland enabling legislation, Title 8 of the Land Use Article, Annotated Code of Maryland, which grants local governments the ability to create historic preservation commissions to carry out preservation activities, including the designation and review of historic properties. The authority is reflected in the Charter and Code of the City of Annapolis, Chapter 21.56, Historic Preservation. Article 1 of Chapter 21.56 states that the purpose for creating the special Historic Preservation District is to preserve sites, structures, and districts of historical, cultural, archaeological, or architectural significance together with their appurtenances and environmental settings. The existence of an HPC is required by Section 21.08.060 of the City Code. The Commission's mandate is to safeguard Annapolis' heritage as reflected in its three centuries of historic architecture and its broadly visible waterfront.

Before making any changes in the Historic District, project proponents must apply for a Certificate of Approval from the HPC. Certificates of Approval may be approved or denied administratively or at a public hearing. The HPC is required to review all exterior alterations to property in the historic district, including alterations that cannot be seen from the street or water. This includes restoration, rehabilitation, new construction, renovations, and landscaping, as well as replacing building components, such as roofs, doors, windows, porches, railings, and curb cuts. The HPC's decisions are guided by *The Annapolis Historic Preservation Commission Building in the Fourth Century – Annapolis Historic District Design Manual* (Design Manual) (2011).

Representatives from AECOM, WGM Architects, City of Annapolis staff, and City of Annapolis HPC held a pre-application meeting on March 23, 2017 to discuss the project. There were insufficient details in the concept AECOM presented for the HPC to commence a formal review. The HPC's comments and recommendations during the meeting are not binding. The application will be formally considered at a later hearing and will require significant detail about the proposed project. This hearing is typically held when the design is more than 90 percent complete. The HPC provided the following comments the project team's consideration:

- The HPC indicated that its jurisdiction lies with the aboveground pump station control structures and archaeological preservation during excavation.
- The HPC believes that guidelines issued under *The Annapolis Historic Preservation Commission: Building in the Fourth Century – Annapolis Historic District Design Manual* (2011) are applicable to the aboveground control structures as new construction.
- The HPC expects that these structures will be contemporary buildings designed to be in harmony with their surroundings. No false sense of history should be employed to mask their modern function.
- The HPC would like to see interpretive signage and public art incorporated into this project. People should be able to learn about the nature of this project through creative means. Walls of the proposed structure could be used to further this goal.
- The HPC believes the following guidelines from the Design Manual are critical and should be considered:
  - A-1: The Town Plan and Focal Points: New buildings should reinforce the historic town plan of Annapolis and should respect traditional views and visual focal points, including the State House, St. Anne's Church, and the water.
  - A-3: Views from the Water: All projects that are visible from the water shall respect and reinforce the historic character of the district and shall respect traditional views and visual focal points. This is applicable to views both to and from the water. It was noted that both proposed control structures are located outside the view sheds of concern. HPC asked the applicant to photograph the view corridors for each location (Harbormaster Building zone and Newman Street zone).

  - B-1: Visual Relationships between the Old and New: A new building or addition should visually relate to contributing historic buildings in its immediate neighborhood rather than to buildings in the historic district in general.
  - B-2: New Building Design: The design of new buildings and additions should be compatible with, but not imitate, existing historic buildings.
  - B-3: Building Height and Bulk: New buildings should respect the bulk and height of neighboring buildings. The façade height and proportions of new buildings should be compatible with the predominant character of other buildings in the streetscape.
  - D-29: Utility Meters and Connections: Utility meters and connections mounted on visually prominent walls detract from the historic character of the building and the district. Placement of utility meters, service locations, wires, piping, boxes, and conduits should be in unobtrusive locations.
  - E-1: Conditions Requiring an Archaeological Study: The City's preservation staff recommends that the applicant retain the services of an archaeological consultant who meets the criteria established by the Secretary of the U.S. Department of the Interior. HPC suggested that the City start with a Phase I study and see what impacts the project may have. Work done previously for the City Dock wall reconstruction in 2015–2016 should be referenced, but there are changes to the archaeology requirements that will need to be clarified by Lisa Craig.
  - E-2: Archaeological Study: If the Commission determines that an application requires archaeological review, the applicant shall retain a qualified archaeological consultant.

- The design team needs to ensure that all existing structures and property lines are shown on plan sheets, specifically, the historic homes located along the southwest side of St. Mary's Park. Setbacks from structures will need to be maintained. HPC wants the applicant to verify with Planning & Zoning staff that utility structures and support buildings are not subject to the zoning code regarding setbacks and height and bulk restrictions.
- Landscape guidelines should be closely followed in the area of the Alex Haley Statue and St. Anne's Park located at Newman Street and Compromise Street. Landscape is preferred over hardscape.
- The HPC requested that the applicant identify all tree removal in the area of the new work.
- The HPC prefers that the site plan to be extended farther to the south and west include more of the context on both sides of Newman Street. Extend plan view to Duke of Gloucester Street.
- The HPC requested that the design team provide a section view of elevation changes along St. Mary's Park. The section view should be cut coming down Newman Street from Duke of Gloucester Street across Compromise Street. This would show the approximate heights and scale of existing residential structures uphill from the Newman Street playground, the location and height of the Control Building and Pump Stations, and the discharge pipes.
- The HPC reiterated that once formal application is submitted, it is expected that items in the application will begin construction within one year of approval.
- The HPC stated that sidewalks, curbs, and other hardscapes that are disturbed during construction must be replaced in kind.
- Details for new pavements, hatches, covers, etc. will need to be provided at the time of final application.
- HPC staff suggested one more pre-application meeting to discuss additional details of the aboveground structures, as well as potential limits of excavation and view sheds from and to the water.

4.3.2 Regulatory/Code Compliance

As of March 1, 2017, the City of Annapolis has adopted the following updated codes with local amendments. Compliance with these codes will be required to obtain a building permit:

- 2015 International Building Code
- 2015 International Existing Building Code
- 2015 International Energy Conservation Code
- 2015 International Mechanical Code
- 2015 National Fuel Gas Code
- 2015 International Plumbing Code
- 2015 NFPA #101 Life Safety Code
- 2015 NFPA #1 Fire Prevention Code
- 2012 National Electrical Safety Code
- 2011 National Electrical Code

4.4 Construction Phasing

As host to the nation's largest and oldest in-water boat shows, Annapolis' tourism industry experiences a considerable boost in October and April of each year. The Naval Academy's Commissioning Week in late spring also draws a large crowd of visitors to the area. Construction of the proposed flood mitigation system will need to be phased such that the bi-annual boat shows and activities of Commissioning Week can continue as planned. Access to City Dock, traffic disruptions, parking, and utilities will all need to be managed and maintained as construction envelopes the area. Construction will be halted and temporary stabilized to allow full use of the City Dock Area. Figure 28 shows the general sequencing of construction; time of year constraints will be incorporated as the project is refined.

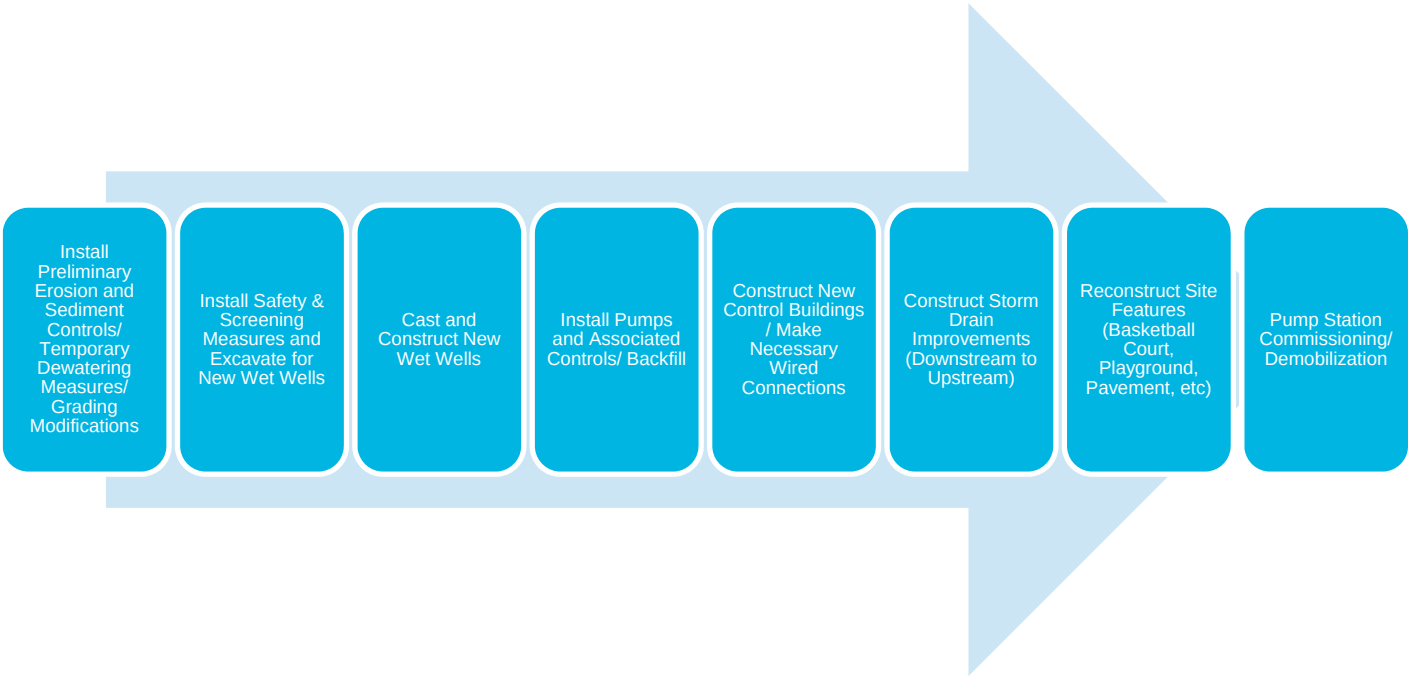

Figure 28: General Construction Sequence

To protect existing waterways from pollution introduced during construction, erosion and sediment control measures approved by Anne Arundel Soil Conservation District would be installed. These measures may include inlet protection at curb and grade inlets in the project area, silt fencing in unpaved areas, same-day stabilization where applicable, and dewatering measures to list a few.

Temporary drainage measures will also need to be installed to ensure positive drainage during construction. Best management practices for water conveyance and dewatering from the MDE's Standards and Specifications for Soil Erosion and Sediment Control will be employed on site. Practices may include temporary storm drain diversions, clear water diversions, removable pumping stations, sump pits, portable sediment tanks, and filter bags.

Installation of the proposed storm drain systems will require thoughtful traffic management plans to ensure traffic flow in these busy corridors of Annapolis is maintained. Alternative work hours, weekend shifts, and the use of steel plates will be necessary to protect exposed utilities and smoothly route traffic. If using alternative work hours during off-peak times, the project team will also need to mitigate for elevated construction noise levels, which may be a nuisance to local restaurants, businesses, and residents. Dust and pollution resulting from construction activities will be addressed in the construction documents and reinforced by our on-site personnel during construction.

Opportunities to use precast and prefabricated components will also be investigated to shorten construction durations, particularly with regard to subsurface work. Fiberglass wet wells, for example, are feasible up to 10 feet in diameter. A conservative estimate is that the construction duration for this project will be 15 months, so construction will coincide with the bi-annual boat shows and Commissioning Week. Therefore, construction activities will need to be paused and temporary measures such as additional screening and pedestrian crossings will need to be put in place.

Construction Phasing of Pump Stations

Pump station construction can be performed concurrently, before, or after installation of discharge lines and in-line check valves. Upstream drain line hookups should not be made until the station is operational. Pump station construction will affect at least one boat show, and possibly two. The key is to have a secure perimeter around each construction site that allows construction to be safely and securely shut down during the boat shows. The general sequence for pump station construction is provided below.

- Install security fencing with privacy screens along the perimeter of work sites. Allow a minimum clearance of 10 feet all around the wet well and 25 feet of clearance on two opposite sides for placement of a crane. Laydown areas are needed at each site for stockpiling earthen materials and reinforcing steel.
- Demolish area pavement and relocated existing subsurface and overhead utilities within this perimeter.
- Install sheet pile shoring. Vibrations at the Harbormaster's Building must be minimized. The method of installation with the lowest vibration levels is the "press-in" method, so this method must be investigated during final design. In any case, install vibration monitoring equipment at adjacent structures.
- Begin excavation of interior of shoring, installing the waler and strut system as excavation progresses downward. This will be in the wet excavation. When excavation reaches the bottom, place a several-foot-thick layer of crushed stone underwater. Place a tremied slab in the water on top of crushed stone. When tremied concrete has cured, unwater excavation interior. (Note that to unwater means to remove water without lowering the exterior groundwater table, as opposed to dewater, which means to remove water that may or may not result in lowering groundwater table.)
- Sequentially form and cast the wet well base slab, walls, and roof, including required embedments. Sufficient opening must be maintained in the roof to remove roof shoring unless stay-in-place deck forms are used.
- Install pumps and associated piping and float levels. Pre-load wells with water temporarily if instantaneous settlement is a concern.
- Backfill between shoring and well, removing walers and struts as backfilling progresses.
- Connect influent and discharge pipes.

- Construction of the control buildings can progress concurrently with wet well construction, particularly when concrete pours are curing. If redundant shut-off valves are part of the project, the valve vaults can also be constructed concurrently with the wet wells.
- Connect power and controls to pumps.
- Perform adjacent site work.
- Perform pump station commissioning.
- Perform site clean-up and demobilization.

Temporary drainage will need to be provided in the proposed project area such that rainfall does not impede construction activities or cause localized flooding.

4.5 Estimated Cost

Based on details of the project as described in this report and accompanying schematic level plans, the AECOM design team has established preliminary estimates for construction, operations and maintenance encompassing the full life cycle of this system. Refer to Appendix C. Future costs are estimated at present-day dollars and do not take into account the effects of inflation or a rate of return.

Appendix A
Calculations

North Pump Station Calculations

North Pump Drainage Area

Object ID	Acres	Runoff_Coe	C*A	Travel Time
15	1.4221	0.73	1.038133	5
81	0.6364	0.89	0.566396	5
20	0.1993	0.95	0.189335	5
95	0.7286	0.85	0.61931	5
108	0.1821	0.95	0.172995	5
28	0.5492	0.92	0.505264	5
99	0.0118	0.94	0.011092	5
100	0.639	0.92	0.58788	5
96	0.2541	0.92	0.233772	5
37	0.2149	0.88	0.189112	5
38	0.5123	0.92	0.471316	5
101	0.0877	0.81	0.071037	5
41	0.0898	0.92	0.082616	5
43	0.0864	0.95	0.08208	5
48	0.2565	0.9	0.23085	5
52	0.1044	0.85	0.08874	5
50	0.0954	0.87	0.082998	5
44	0.1277	0.9	0.11493	5
86	0.0227	0.95	0.021565	5

Total Area	6.2204
Weighted C	0.861588
Intensity (5 min - 10 year storm)	6.64
Flow Rate	**35.58656**

SHA 61.1-102

MARYLAND STATE HIGHWAY ADMINISTRATION

SHEET OF

MINIMUM TIME (MIN.): 5

DESIGNED BY: _____

STORM SEWER DESIGN

CHECKED BY:

CONTRACT : _____

TITLE : North Pump Station

RAINFALL FACTORS: 1.02 | 1 | 1

DURATION: 0-10 | 10.1-40 | 40.1-150 MINS.

STRUCTURE		CONTRIBUTING AREA				10 YEAR RUNOFF					PIPE								
FROM	TO	AREA (#)	A AREA AC.	RUNOFF Coef.	Δ CA	∑A	∑ CA	Tc Time Conc. Min.	Rainfall Intens. IN./ HR.	Q cfs	SIZE IN.	TYPE	N MANN-ING'S COEF.	So Slope %	L Length Ft.	Vo. Vel. ft./sec.	Time in Pipe Min.	Capacity Full Cfs.	REMARKS
120	118A	15	1.42	0.73	1.04	1.42	1.04	5.00	6.64	6.89	15	RCP	0.012	1.00	45	6.49	0.12	7.00	New Pipe
119	118A	81.00	0.64	0.89	0.57	0.64	0.57	5.00	6.64	3.76	12	RCP	0.012	1.00	35	5.58	0.10	3.86	New Pipe
118A	137	N/A	N/A	N/A	N/A	2.06	1.60	5.00	6.64	10.65	18	RCP	0.012	1.00	99	7.26	0.23	11.38	New Pipe
138	137	95	0.73	0.85	0.62	0.73	0.62	5.00	6.64	4.11	15	RCP	0.012	1.00	53	5.92	0.15	7.00	
137	I-12a	20	0.20	0.95	0.19	2.99	2.41	5.00	6.64	16.02	21	RCP	0.012	1.00	122	8.09	0.25	17.16	New Pipe
I-12a	139	108	0.18	0.95	0.17	3.17	2.59	5.00	6.64	17.17	24	RCP	0.012	1.00	155	8.38	0.31	24.50	New Pipe
141	140	100	0.64	0.92	0.588	0.64	0.59	5.00	6.64	3.90	15	RCP	0.012	1.00	21	5.81	0.06	7.00	
140	139	99	0.01	0.94	0.01	0.65	0.60	5.00	6.64	3.98	15	RCP	0.012	1.00	83	5.82	0.24	7.00	
139	142	28	0.55	0.92	0.51	4.37	3.69	5.00	6.64	24.50	27	RCP	0.012	1.00	60	9.15	0.11	33.54	New Pipe
142	143	96	0.25	0.92	0.23	3.94	3.92	5.00	6.64	26.06	27	RCP	0.012	1.00	99	9.30	0.18	33.54	New Pipe
143	MH2	N/A	N/A	N/A	N/A	3.94	3.92	5.00	6.64	26.06	27	RCP	0.012	1.00	7	9.30	0.01	33.54	New Pipe
I-7	I-6	50	0.10	0.87	0.08	0.10	0.08	5.00	6.64	0.55	9	RCP	0.012	1.00	79	3.48	0.38	1.79	New Pipe
I-6	146	52	0.10	0.85	0.09	0.20	0.17	5.00	6.64	1.14	9	RCP	0.012	1.00	85	4.21	0.34	1.79	New Pipe
146	145	48	0.26	0.9	0.23	0.46	0.40	5.00	6.64	2.67	12	RCP	0.012	1.00	65	5.22	0.21	3.86	New Pipe
145	144	43	0.09	0.95	0.08	0.54	0.48	5.00	6.64	3.22	12	RCP	0.012	1.00	54	5.47	0.16	3.86	New Pipe
144	MH-2	41	0.09	0.92	0.08	0.63	0.57	5.00	6.64	3.77	12	RCP	0.012	1.00	52	5.59	0.16	3.86	New Pipe
MH-2	MH3	N/A	N/A	N/A	N/A	4.58	4.49	5.00	6.64	29.82	27	RCP	0.012	1.00	111	9.57	0.19	33.54	New Pipe
I-11	147	101	0.09	0.81	0.07	0.09	0.07	5.00	6.64	0.47	9	RCP	0.012	1.00	64	3.28	0.33	1.79	New Pipe
147	MH-1	38	0.51	0.92	0.47	0.60	0.54	5.00	6.64	3.60	12	RCP	0.012	1.00	59	5.54	0.18	3.86	New Pipe
I-8	I-9	44	0.13	0.9	0.11	0.13	0.11	5.00	6.64	0.76	9	RCP	0.012	1.00	81	3.77	0.36	1.79	New Pipe

SHA 61.1-102

MARYLAND STATE HIGHWAY ADMINISTRATION

SHEET OF

MINIMUM TIME (MIN.): 5

DESIGNED BY: _____

STORM SEWER DESIGN

CHECKED BY:

CONTRACT : _____

TITLE : North Pump Station

RAINFALL FACTORS: 1.02 | 1 | 1

DURATION: 0-10 | 10.1-40 | 40.1-150 MINS.

STRUCTURE		CONTRIBUTING AREA				10 YEAR RUNOFF					PIPE								
FROM	TO	AREA (#)	A AREA AC.	RUNOFF Coef.	Δ CA	∑A	∑ CA	Tc Time Conc. Min.	Rainfall Intens. IN./ HR.	Q cfs	SIZE IN.	TYPE	N MANN-ING'S COEF.	So Slope %	L Length Ft.	Vo. Vel. ft./sec.	Time in Pipe Min.	Capacity Full Cfs.	REMARKS
I-9	MH-1	86	0.02	0.95	0.02	0.15	0.14	5.00	6.64	0.91	9	RCP	0.012	1.00	43	4.03	0.18	1.79	New Pipe
MH-1	MH-3	N/A	N/A	N/A	N/A	0.75	0.68	5.00	6.64	4.51	15	RCP	0.012	1.00	186	6.05	0.51	7.00	New Pipe
MH-3	Pump	N/A	N/A	N/A	N/A	5.33	5.17	5.00	6.64	34.33	30	RCP	0.012	1.00	5	9.96	0.01	44.43	New Pipe

Annapolis Flood Mitigation
Pump Station Parameters

North Drainage Area = 12.86 ac, tc = 5 min.

Assumed Pump Cycle Time: 7.5 min.

Assumed Wet Well Working Depth: 15 ft

Storm Frequency (yrs)	Flow		Wet Well Volume (ft^3)	Wet Well Surf. Area (ft^2)	Wet Well Dimensions				
					Square Length (ft)	2:1 Rectangular Length:Width		Based on USACE EM 1110-2-3105	
	gpm	cfs				Length (ft)	Width (ft)	Length (ft)	Width (ft)
2	22,792	51	5,713	381	20	28	14		
5	27,177	61	6,812	454	21	30	15		
10	30,328	68	7,602	507	23	32	16		
50	37,222	83	9,330	622	25	35	18		
100	40,103	89	10,053	670	26	37	18	29	23
							With 1.5-ft thick walls:	**32**	**26**
							Adding 10-ft for Shoring + 10-ft Clearance to Construction Fencing:	**52**	**46**

Storm Frequency	No. Pumps: 3	Assume No Spare Pump	
	Req'd Flow/Pump (gpm)	Nominal Pump Size (gpm)	Station Configuration
10-yr	10,109	10,500	3 - 10,500 gpm Pumps
100-yr	13,368	13,500	3 - 13,500 gpm Pumps

City of Annapolis - Stormwater Design

Pump System Headloss & Power

REQUIRED PUMPING RATE & FORCE MAIN DIAMETER

North Area: 10-yr Storm

Flowrate, Q =	68	cfs	Total Flow	30,328	gpm
Discharge Pipe Diam. =	30	inches	No. Pumps	3	
Cross Sectional Area, A =	4.91	ft^2	Q/Pump	10,109	
Number of Pipes =	2				
Velocity, v = Q/ A v =	**6.88**	ft/s			

SYSTEM LENGTH AND ELEVATIONS

Discharge Pipe Length =	120	Linear Feet
Maximum System Elevation =	2.9	M.S.L.
Pump Volute Elevation =	-17	M.S.L.

TOTAL DYNAMIC HEAD

STATIC HEAD

h_s = Static Head = Max Syst Elev - Pump Volute Elev

h_s = 20 ft

SUCTION SIDE

Submersible pump - No suction side losses.

DISCHARGE SIDE

h_f = Friction Headloss due to Pipe

$h_f = 0.002083 \times L \times (100/C)^{1.85} \times (Q^{1.85} / d^{4.865})$

L =	120	ft (pipe length from drawing)
C =	120	(Hazen-Wms "C" from table)
Q =	10,109	gpm (from above)
d=	30	in (pipe diam selected above)
h_f =	0.30	ft

Pipe Material	H-W "C"
Asbestos Cement	145
Smooth Concrete	140
Average Concrete	130
Plastic (PVC, ABS)	135
New Cast Iron	130
5-yr Old Cast Iron	120
20-yr Old Cast Iron	100
Encrusted Cast Iron	80
New Welded Steel	120
Riveted Steel	100
Corrugated Metal	60

h_m = Minor Headloss due to Fittings

$h_m = K (v^2/2g)$

Fittings	Quantity	Coefficient	Minor Losses
90º Bend	2	0.40	0.80
Check Valve	1	2.50	2.50
Reducer/Increaser	1	0.25	0.25
Exit Loss	1	1.00	1.00

Total Loss Coefficient, K = 4.55

h_m = 3.35 ft

Total Dynamic Discharge Head = $h_f + h_m$ = 3.65 ft

Total Dynamic Head (TDH) = Suction Lift + Total Dynamic Discharge Head

TDH = 24 ft

Pump Requirements: **10,109** gpm, at **24** ft, TDH

POWER REQUIREMENTS

Pump Power Required = Q TDH / 3960 μ

Where Q = gpm :	10,109	
TDH = ft :	24	
μ = efficiency :	0.80	**Recommended hp**
Power = hp :	**75**	**100**

AECOM

South Pump Station Calculations

South Pump Drainage Area

Object ID	Acres	Runoff_Coe	C*A	Travel Time
74	0.697	0.87	0.61	5
59	0.3075	0.81	0.25	5
63	2.5532	0.69	1.76	10
65	0.7247	0.53	0.38	5
64	0.9474	0.69	0.65	5
93	0.7015	0.61	0.43	5
60	0.3217	0.62	0.20	5
57	1.4485	0.68	0.98	5
54	3.1792	0.49	1.56	10
98	0.0138	0.41	0.01	5
51	0.1655	0.72	0.12	5
58	0.149	0.91	0.14	5
102	0.3326	0.93	0.31	5
46	0.5217	0.9	0.47	5
92	0.2993	0.92	0.28	5
33	0.531	0.89	0.47	5
31	0.1082	0.9	0.10	5
32	0.3079	0.74	0.23	5
30	0.208	0.92	0.19	5
77	0.2038	0.94	0.19	5
76	0.012	0.95	0.01	5
27	0.8237	0.94	0.77	5
26	1.8079	0.84	1.52	5
23	4.2164	0.78	3.29	10
78	0.3408	0.93	0.32	5
24	0.4004	0.86	0.34	5
88	0.1754	0.95	0.17	5
79	0.0088	0.95	0.01	5
22	0.2224	0.92	0.20	5
17	0.1962	0.93	0.18	5
42	0.2109	0.65	0.14	5
49	0.4143	0.58	0.24	5
90	0.447	0.9	0.40	5
51	0.1655	0.72	0.12	5

Total Area	23.1632
Weighted C	0.7354676
Intensity (10 min - 10 year storm)	5.31
Flow Rate	**90.460013**

SHA 61.1-102

MARYLAND STATE HIGHWAY ADMINISTRATION

SHEET OF

MINIMUM TIME (MIN.): 5

DESIGNED BY: _____

STORM SEWER DESIGN

CHECKED BY:

CONTRACT : _____

TITLE : South Pump Station

RAINFALL FACTORS: 1.02 | 1 | 1

DURATION: 0-10 | 10.1-40 | 40.1-150 MINS.

STRUCTURE		CONTRIBUTING AREA				10 YEAR RUNOFF					PIPE								
FROM	TO	AREA (#)	A AREA AC.	RUNOFF Coef.	Δ CA	∑A	∑ CA	Tc Time Conc. Min.	Rainfall Intens. IN./ HR.	Q cfs	SIZE IN.	TYPE	N MANN-ING'S COEF.	So Slope %	L Length Ft.	Vo. Vel. ft./sec.	Time in Pipe Min.	Capacity Full Cfs.	REMARKS
33	30	76	0.01	0.95	0.01	0.01	0.01	5.00	6.64	0.08	5	RCP	0.012	1.00	50	1.87	0.45	0.38	New Pipe
30	UJ15	27	0.82	0.94	0.77	0.84	0.79	5.00	6.64	5.22	15	RCP	0.012	1.00	68	6.18	0.18	7.00	
31	UJ15	26	1.81	0.84	1.52	1.81	1.52	5.00	6.64	10.08	18	RCP	0.012	1.00	81	7.24	0.19	11.38	
UJ15	129	N/A	N/A	N/A	N/A	2.64	2.30	5.00	6.64	15.30	21	RCP	0.012	1.00	76	8.05	0.16	17.16	
129	127	88	0.18	0.95	0.17	2.82	2.47	5.00	6.64	16.41	21	RCP	0.012	1.00	24	8.11	0.05	17.16	
128	127	77	0.20	0.94	0.19	0.20	0.19	5.00	6.64	1.27	9	RCP	0.012	1.00	11	4.35	0.04	1.79	
127	148	79	0.01	0.95	0.01	3.03	2.67	5.00	6.64	17.73	24	RCP	0.012	1.00	151	8.50	0.30	24.50	New Pipe
130	131	23	4.22	0.78	3.29	4.22	3.29	10.00	5.31	17.46	24	RCP	0.012	1.00	11	8.60	0.02	24.50	
131	132	N/A	N/A	N/A	N/A	4.22	3.29	5.00	6.64	21.84	24	RCP	0.012	1.00	82	8.60	0.16	24.50	
132	135	N/A	N/A	N/A	N/A	4.22	3.29	5.00	6.64	21.84	24	RCP	0.012	1.00	70	8.60	0.14	24.50	
133	134	17	0.20	0.93	0.18	0.20	0.18	5.00	6.64	1.21	9	RCP	0.012	1.00	59	4.26	0.23	1.79	
134	135	22	0.22	0.92	0.20	0.42	0.39	5.00	6.64	2.57	12	RCP	0.012	1.00	29	5.21	0.09	3.86	
135	123	N/A	N/A	N/A	N/A	4.64	3.68	5.00	6.64	24.41	24	RCP	0.012	1.00	82	8.84	0.15	24.50	
125	123	24	0.40	0.86	0.34	0.40	0.34	5.00	6.64	2.29	12	RCP	0.012	1.00	18	5.03	0.06	3.86	
124	123	78	0.34	0.93	0.32	0.34	0.32	5.00	6.64	2.10	12	RCP	0.012	1.00	16	4.96	0.05	3.86	
123	148	N/A	N/A	N/A	N/A	5.38	4.34	5.00	6.64	28.80	27	RCP	0.012	1.00	134	9.44	0.24	33.54	New Pipe
148	149	30	0.21	0.92	0.19	8.62	7.20	5.00	6.64	47.80	36	RCP	0.012	1.00	57	10.82	0.09	72.25	
149	150	32	0.31	0.74	0.23	8.92	7.43	5.00	6.64	49.32	36	RCP	0.012	1.00	57	10.95	0.09	72.25	

SHA 61.1-102

MARYLAND STATE HIGHWAY ADMINISTRATION

SHEET OF

MINIMUM TIME (MIN.): 5

DESIGNED BY: _____

STORM SEWER DESIGN

CHECKED BY:

CONTRACT : _____

TITLE : South Pump Station

RAINFALL FACTORS: 1.02 | 1 | 1

DURATION: 0-10 | 10.1-40 | 40.1-150 MINS.

STRUCTURE		CONTRIBUTING AREA				10 YEAR RUNOFF					PIPE								
FROM	TO	AREA (#)	A AREA AC.	RUNOFF Coef.	Δ CA	∑A	∑ CA	Tc Time Conc. Min.	Rainfall Intens. IN./ HR.	Q cfs	SIZE IN.	TYPE	N MANN-ING'S COEF.	So Slope %	L Length Ft.	Vo. Vel. ft./sec.	Time in Pipe Min.	Capacity Full Cfs.	REMARKS
151	150	33	0.53	0.89	0.47	0.89	0.47	5.00	6.64	3.14	12	RCP	0.012	1.00	76	5.41	0.23	3.86	New Pipe
150	72	31	0.11	0.9	0.10	9.92	8.00	5.00	6.64	53.10	36	RCP	0.012	1.00	95	11.16	0.14	72.25	New Pipe
Unknown	71	42	0.21	0.65	0.14	0.21	0.14	5.00	6.64	0.91	9	RCP	0.012	1.00	33	4.05	0.14	1.79	
70	71	49	0.41	0.58	0.24	0.41	0.24	5.00	6.64	1.60	9	RCP	0.012	1.00	20	4.50	0.07	1.79	
71	72	N/A	N/A	N/A	N/A	0.63	0.38	5.00	6.64	2.51	12	RCP	0.012	1.00	42	5.18	0.14	3.86	
72	UJ18	N/A	N/A	N/A	N/A	10.55	8.37	5.00	6.64	55.61	36	RCP	0.012	1.00	191	11.20	0.28	72.25	
69	68	90	0.45	0.9	0.40	0.45	0.40	5.00	6.64	2.67	12	RCP	0.012	1.00	82	5.21	0.26	3.86	
68	UJ18	51	0.17	0.72	0.12	0.61	0.52	5.00	6.64	3.46	12	RCP	0.012	1.00	97	5.54	0.29	3.86	
UJ18	UJ19	N/A	N/A	N/A	N/A	11.16	8.90	5.00	6.64	59.07	36	RCP	0.012	1.00	11	11.32	0.02	72.25	
67	UJ19	92	0.30	0.92	0.28	0.30	0.28	5.00	6.64	1.83	12	RCP	0.012	1.00	9	4.75	0.03	3.86	
66	65	46	0.52	0.9	0.47	0.52	0.47	5.00	6.64	3.12	12	RCP	0.012	1.00	66	5.38	0.20	3.86	
65	64	102	0.33	0.93	0.31	0.85	0.78	5.00	6.64	5.17	15	RCP	0.012	1.00	132	6.23	0.35	7.00	
64	63	58	0.15	0.91	0.14	1.00	0.91	5.00	6.64	6.07	15	RCP	0.012	1.00	22	6.40	0.06	7.00	
60	62	57	1.45	0.68	0.98	1.45	0.98	5.00	6.64	6.54	15	RCP	0.012	1.00	21	6.45	0.05	7.00	
61	62	98	0.01	0.41	0.01	0.01	0.01	5.00	6.64	0.09	5	RCP	0.012	1.00	13	2.26	0.10	0.38	
62	63	54	3.18	0.49	1.56	4.64	0.99	10.00	5.31	5.26	15	RCP	0.012	1.00	30	6.42	0.08	7.00	
55	54	74	0.70	0.87	0.61	0.70	0.61	5.00	6.64	4.03	15	RCP	0.012	1.00	12	5.89	0.03	7.00	

SHA 61.1-102

MARYLAND STATE HIGHWAY ADMINISTRATION

SHEET OF

MINIMUM TIME (MIN.): 5

DESIGNED BY: _____

STORM SEWER DESIGN

CHECKED BY:

CONTRACT : _____

TITLE : South Pump Station

RAINFALL FACTORS: 1.02 | 1 | 1

DURATION: 0-10 | 10.1-40 | 40.1-150 MINS.

STRUCTURE		CONTRIBUTING AREA				10 YEAR RUNOFF					PIPE								
FROM	TO	AREA (#)	A AREA AC.	RUNOFF Coef.	Δ CA	∑A	∑ CA	Tc Time Conc. Min.	Rainfall Intens. IN./ HR.	Q cfs	SIZE IN.	TYPE	N MANN-ING'S COEF.	So Slope %	L Length Ft.	Vo. Vel. ft./sec.	Time in Pipe Min.	Capacity Full Cfs.	REMARKS
51	54	63	2.55	0.69	1.76	2.55	1.76	10.00	5.31	9.35	18	RCP	0.012	1.00	85	7.14	0.20	11.38	
52	53	65	0.72	0.53	0.38	0.72	0.38	5.00	6.64	2.55	12	RCP	0.012	1.00	39	5.17	0.13	3.86	
53	54	64	0.95	0.69	0.65	1.67	1.04	5.00	6.64	6.89	15	RCP	0.012	1.00	51	6.48	0.13	7.00	
54	56	N/A	N/A	N/A	N/A	4.92	3.41	5.00	6.64	22.62	24	RCP	0.012	1.00	195	8.82	0.37	24.50	
57	56	59	0.31	0.81	0.25	0.31	0.25	5.00	6.64	1.65	9	RCP	0.012	1.00	20	4.59	0.07	1.79	
59	58	93	0.71	0.61	0.43	0.71	0.43	5.00	6.64	2.86	12	RCP	0.012	1.00	21	5.26	0.07	3.86	
58	56	60	0.32	0.62	0.20	1.03	0.63	5.00	6.64	4.18	15	RCP	0.012	1.00	35	5.89	0.10	7.00	
56	63	N/A	N/A	N/A	N/A	6.26	4.28	5.00	6.64	28.45	27	RCP	0.012	1.00	26	9.45	0.05	33.54	New Pipe
63	UJ19	N/A	N/A	N/A	N/A	11.90	6.19	5.00	6.64	41.10	30	RCP	0.012	1.00	29	10.25	0.05	44.43	
UJ19	Pump	N/A	N/A	N/A	N/A	23.36	15.36	5.00	6.64	102.00	42	RCP	0.012	1.00	176	12.88	0.23	109.00	New Pipe

Annapolis Flood Mitigation
Pump Station Parameters

South Drainage Area = 24.28 ac, tc = 10 min.

Assumed Pump Cycle Time: 7.5 min.

Assumed Wet Well Working Depth: 15 ft

Storm Frequency (yrs)	Flow		Wet Well Volume (ft^3)	Wet Well Surf. Area (ft^2)	Wet Well Dimensions				
					Square Length (ft)	2:1 Rectangular Length:Width		Based on USACE EM 1110-2-3105	
	gpm	cfs				Length (ft)	Width (ft)	Length (ft)	Width (ft)
2	32,006	71	8,023	535	23	33	16		
5	38,169	85	9,568	638	25	36	18		
10	42,491	95	10,651	710	27	38	19		
50	51,930	116	13,017	868	29	42	21		
100	55,853	124	14,001	933	31	43	22	36	26
							With 1.5-ft thick walls:	**39**	**29**
							Adding 10-ft for Shoring + 10-ft Clearance to Construction Fencing:	**59**	**49**

Storm Frequency	No. Pumps: 3	Assume No Spare Pump	
	Req'd Flow/Pump (gpm)	Nominal Pump Size (gpm)	Station Configuration
10-yr	14,164	14,500	3 - 14,500 gpm Pumps
100-yr	18,618	19,000	3 - 19,000 gpm Pumps

City of Annapolis - Stormwater Design
Pump System Headloss & Power

REQUIRED PUMPING RATE & FORCE MAIN DIAMETER

South Area: 10-yr Storm

Flowrate/Pump, Q =	95	cfs	Total Flow	42,491	gpm
Discharge Pipe Diam. =	36	inches	No. Pumps	3	
Cross Sectional Area, A =	7.07	ft^2	Q/Pump	14,164	
Number of Pipes =	2				
Velocity, v = Q/ A v =	**6.70**	ft/s			

SYSTEM LENGTH AND ELEVATIONS

Discharge Pipe Length =	280	Linear Feet
Maximum Tailwater Elevation =	2.9	M.S.L.
Pump Volute Elevation =	-15	M.S.L.

TOTAL DYNAMIC HEAD

STATIC HEAD

h_s = Static Head = Max Syst Elev - Pump Volute Elev

h_s = 18 ft

SUCTION SIDE

Submersible pump - No suction side losses.

DISCHARGE SIDE

h_f = Friction Headloss due to Pipe

$h_f = 0.002083 \times L \times (100/C)^{1.85} \times (Q^{1.85} / d^{4.865})$

L =	280	ft (pipe length from drawing)
C =	120	(Hazen-Wms "C" from table)
Q =	14,164	gpm (from above)
d=	36	in (pipe diam selected above)
h_f =	0.53	ft

Pipe Material	H-W "C"
Asbestos Cement	145
Smooth Concrete	140
Average Concrete	130
Plastic (PVC, ABS)	135
New Cast Iron	130
5-yr Old Cast Iron	120
20-yr Old Cast Iron	100
Encrusted Cast Iron	80
New Welded Steel	120
Riveted Steel	100
Corrugated Metal	60

h_m = Minor Headloss due to Fittings

$h_m = K (v^2/2g)$

Fittings	Quantity	Coefficient	Minor Losses
90º Bend	2	0.40	0.80
Check Valve	1	2.50	2.50
Reducer/Increaser	1	0.25	0.25
Exit Loss	1	1.00	1.00

Total Loss Coefficient, K = 4.55

h_m = 3.17 ft

Total Dynamic Discharge Head = $h_f + h_m$ = 3.70 ft

Total Dynamic Head (TDH) = Suction Lift + Total Dynamic Discharge Head

TDH = 22 ft

Pump Requirements: **14,164** gpm, at **22** ft, TDH

POWER REQUIREMENTS

Pump Power Required = Q TDH / 3960 μ

Where Q = gpm :	7,082	
TDH = ft :	22	
μ = efficiency :	0.80	**Recommended hp**
Power = hp :	**48**	**75**

Appendix B
Schematic Plan Sheets

CITY OF ANNAPOLIS
ANNE ARUNDEL COUNTY, MARYLAND
DEPARTMENT OF PUBLIC WORKS

STORMWATER AND FLOOD MITIGATION ENGINEERING DESIGN SERVICES

CONCEPT DESIGN

PURCHASE ORDER NO. 20171260-00
AECOM PROJECT NUMBER: 60533093

MAY 2, 2017

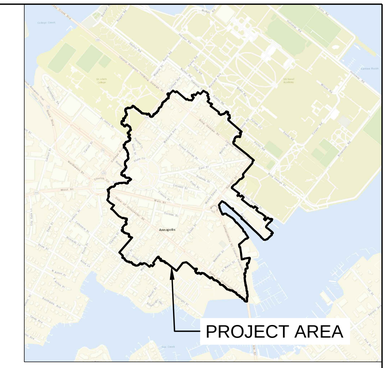

VICINITY MAP
1" = 1000'

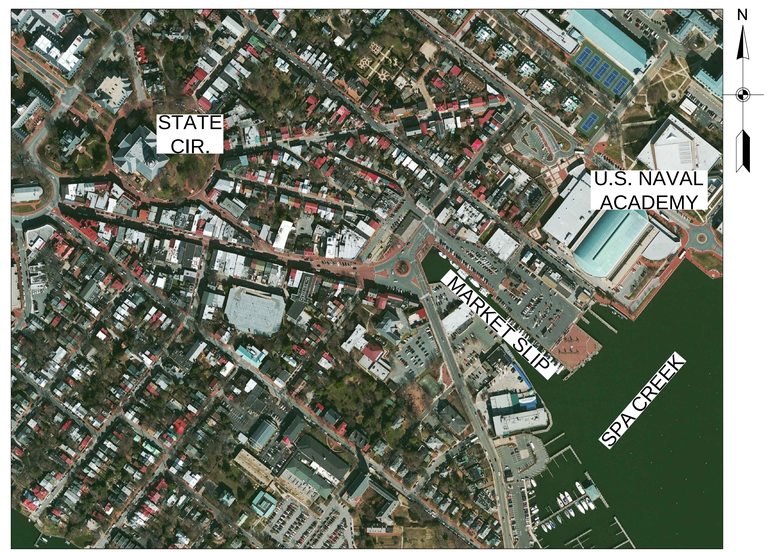

LOCATION MAP
1" = 300'

SHEET INDEX

SHEET NO.	SHEET TITLE
1	COVER SHEET
2	EXISTING DRAINAGE AREA MAP
3	EXISTING CONDITIONS & DEMOLITION PLAN
4	PROPOSED DRAINAGE AREA MAP
5	SITE PLAN
6	PROPOSED CONDITIONS
7	NORTH PUMP STATION
8	NORTH PUMP STATION SINGLE-LINE
9	NORTH PUMP STATION LAYOUT
10	SOUTH PUMP STATION
11	SOUTH PUMP STATION SINGLE-LINE
12	SOUTH PUMP STATION LAYOUT

NOT FOR CONSTRUCTION — CONCEPT DESIGN

CLIENT:

CITY OF ANNAPOLIS
DEPARTMENT OF PUBLIC WORKS
161 DUKE OF GLOUCESTER ST.
ANNAPOLIS, MD 21401

I HEREBY CERTIFY THAT THESE DOCUMENTS WERE PREPARED OR APPROVED BY ME, AND THAT I AM A DULY LICENSED LANDSCAPE ARCHITECT UNDER THE LAWS OF THE STATE OF MARYLAND.

DATE

LICENSE NO. EXP. DATE

REVISION DESCRIPTION	BY	DATE

DESIGN BY:

AECOM
12420 MILESTONE CENTER DRIVE
SUITE 150
GERMANTOWN, MD 20876
(301) 820-3000
CONTACT: UMAR SHAHID, PE, PMP, LEED AP

CITY OF ANNAPOLIS
DEPARTMENT OF PUBLIC WORKS

APPROVED DATE	APPROVED DATE	SCALE: AS NOTED	COVER SHEET
		DRAWN BY: TC	
CHIEF ENGINEER	PROJECT MANAGER	CHECKED BY: US	STORMWATER AND FLOOD MITIGATION ENGINEERING DESIGN SERVICES
APPROVED DATE	APPROVED DATE	SHEET: 2 OF 12	
		PROJECT NO.: 60533093	
ASSISTANT CHIEF ENGINEER	CHIEF RIGHT-OF-WAY	CONTRACT NO.:	AECOM PROJECT #: 60533093

May 2017 FILE: C:\pwworking\aecom_na\tomas.concepcion\d0117005\60533093-Sht-20-PH01-G-Cover Sheet.dwg

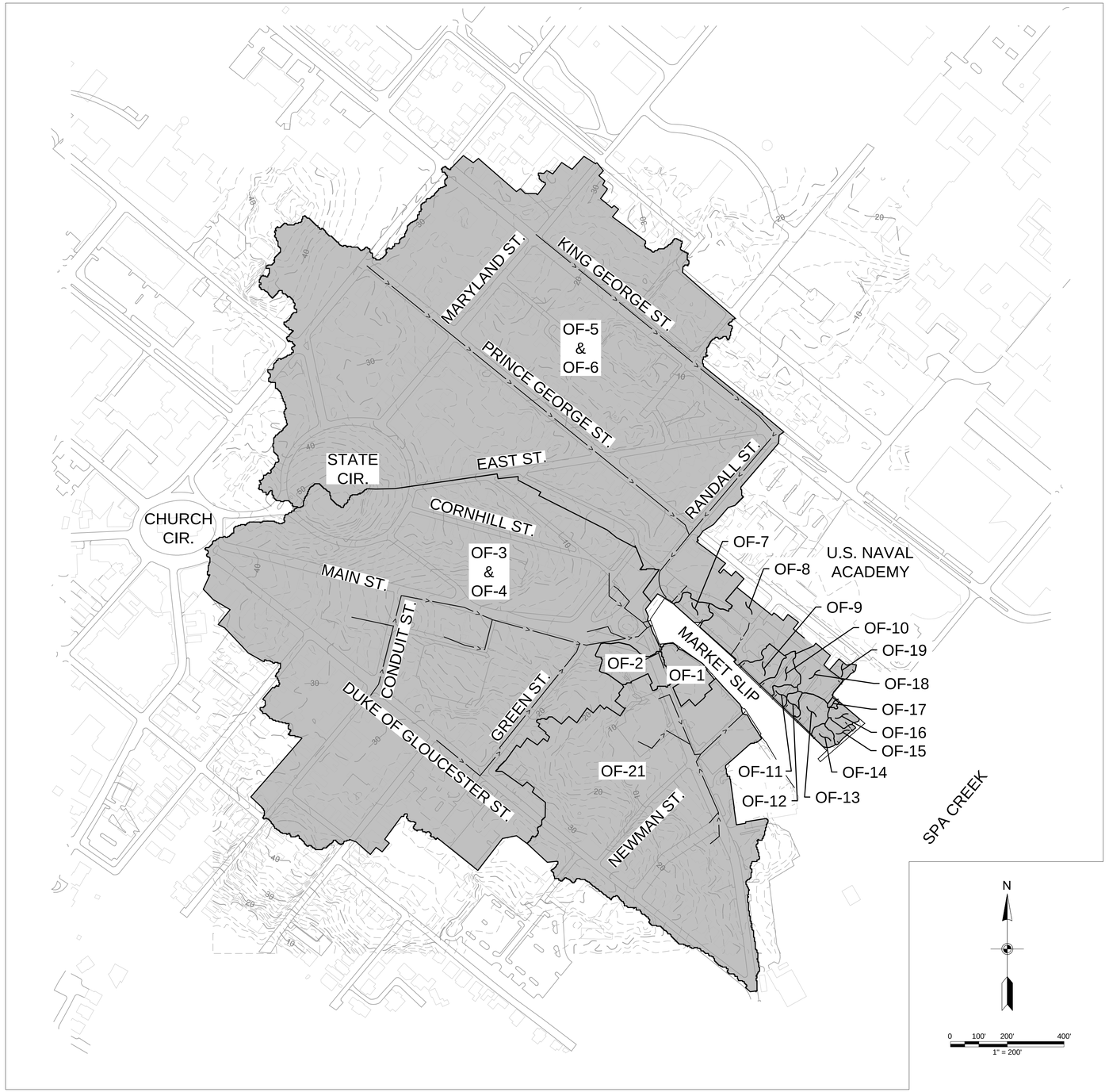

GENERAL NOTES:

1. EXISTING BUILDINGS, ROADWAY ALIGNMENTS AND TOPOGRAPHIC DATA ARE DERIVED FORM GIS DATA PROVIDED BY THE CITY OF ANNAPOLIS IN JANUARY, 2017.

LEGEND:

EXISTING MAJOR CONTOUR
EXISTING MINOR CONTOUR
DRAINAGE AREA (90 ACRES)
FLOW PATH

Drainage Area Table

Drainage Area ID (Outfall #)	Area (acres)[2]	Runoff Coefficient[2]
OF-1	0.53	0.89
OF-2[1]	0.62	0.83
OF-3[1] & OF-4[1]	33.72	0.77
OF-5[1] & OF-6	39.15	0.65
OF-7	0.18	0.95
OF-8[1]	1.20	0.92
OF-9	0.25	0.92
OF-10	0.21	0.88
OF-11	0.09	0.92
OF-12	0.09	0.95
OF-13	0.26	0.90
OF-14	0.10	0.85
OF-15	0.10	0.87
OF-16	0.13	0.90
OF-17	0.02	0.95
OF-18	0.51	0.92
OF-19	0.09	0.81
OF-21[1]	13.43	0.66
Total	*90.70*	

[1] EXISTING FLAP-GATE ON DISCHARGE PIPES INTO MARKET SLIP.

[2] DRAINAGE AREAS AND RUNOFF COEFFICIENTS OBTAINED FROM GANNETT FLEMING'S STORMWATER MODELING, XPSTORM VERSION 17.0.

NOT FOR CONSTRUCTION

CONCEPT DESIGN

CLIENT:

CITY OF ANNAPOLIS
DEPARTMENT OF PUBLIC WORKS
161 DUKE OF GLOUCESTER ST.
ANNAPOLIS, MD 21401

I HEREBY CERTIFY THAT THESE DOCUMENTS WERE PREPARED OR APPROVED BY ME, AND THAT I AM A DULY LICENSED LANDSCAPE ARCHITECT UNDER THE LAWS OF THE STATE OF MARYLAND.

- DATE
- -
LICENSE NO. EXP. DATE

REVISION DESCRIPTION	BY	DATE

DESIGN BY:

AECOM

AECOM
12420 MILESTONE CENTER DRIVE
SUITE 150
GERMANTOWN, MD 20876
(301) 820-3000
CONTACT: UMAR SHAHID, PE, PMP, LEED AP

CITY OF ANNAPOLIS

DEPARTMENT OF PUBLIC WORKS

APPROVED DATE — CHIEF ENGINEER
APPROVED DATE — PROJECT MANAGER
APPROVED DATE — ASSISTANT CHIEF ENGINEER
APPROVED DATE — CHIEF RIGHT-OF-WAY

SCALE: 1" = 200'
DRAWN BY: TC
CHECKED BY: US
SHEET: 2 OF 12
PROJECT NO.: 60533093
CONTRACT NO.:

EXISTING DRAINAGE AREA MAP

STORMWATER AND FLOOD MITIGATION ENGINEERING DESIGN SERVICES

AECOM PROJECT #: 60533093

May 2017 FILE: C:\pwworking\aecom_na\tomas.concepcion\d0117005\60533093-SHT-20-PH01-V-Drainage_Area.dwg

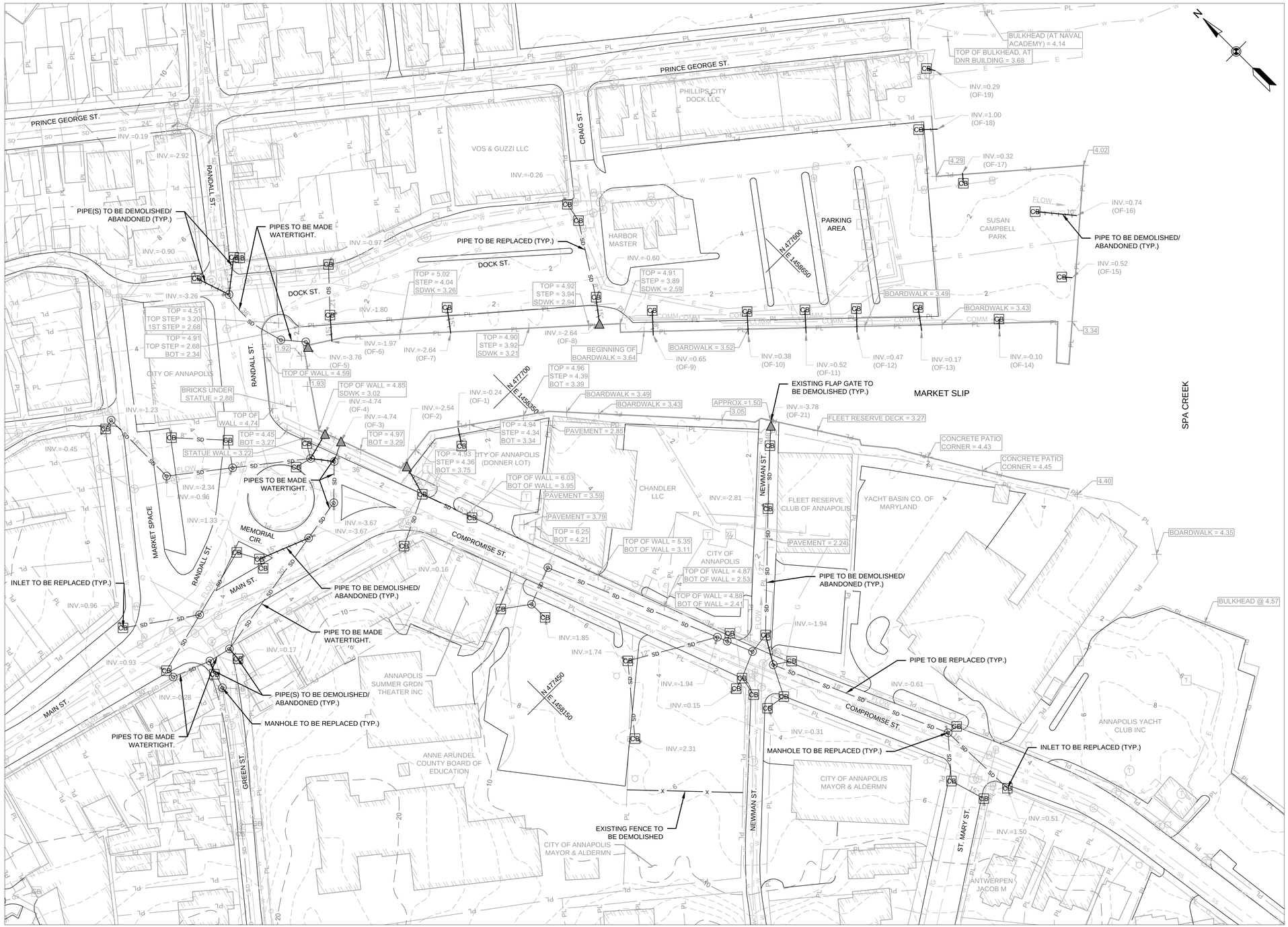

GENERAL NOTES:

1. EXISTING BUILDINGS, ROADWAY ALIGNMENTS, STORM DRAIN LINES, SEWER LINES, WATER LINES AND TOPOGRAPHIC DATA ARE DERIVED FORM GIS DATA PROVIDED BY THE CITY OF ANNAPOLIS IN JANUARY, 2017.
2. LOCATIONS OF UNDERGROUND ELECTRIC LINES, OVERHEAD ELECTRIC LINES, POWER POLES, GAS LINE AND COMMUNICATION LINES ARE FOR INFORMATIONAL PURPOSES ONLY. PLEASE USE A LOCATING SERVICE FOR EXACT MARKINGS.
3. ALL ELEVATIONS SHOWN ARE BASED ON VERTICAL DATUM NAVD88. HORIZONTAL DATUM IS NAD83.

LEGEND:

MAJOR CONTOUR	10
MINOR CONTOUR	4
PROPERTY LINE	PL
ROAD CENTERLINE	
STORM DRAIN LINE	SD SD
STORM DRAIN MANHOLE	D
STORM DRAIN INLET	CB
SANITARY SEWER LINE	SS SS
SANITARY SEWER MANHOLE	S
WATER LINE	W W
WATER STRUCTURE	M
UNDERGROUND ELECTRIC LINE	E
TRANSFORMER (UGE LINE)	T
OVERHEAD ELECTRIC LINE	OHE OHE
TRANSFORMER (OHE LINE)	T
GAS LINE	GAS GAS
GAS STRUCTURE	G
COMMUNICATION LINE	COMM
POWER POLE	
STORM DRAIN LINE TO BE ABANDONED/DEMOLISHED	
STORM DRAIN LINE TO BE REPLACED	SD SD
STORM DRAIN INLET TO BE REPLACED	CB
STORM DRAIN MANHOLE TO BE REPLACED	D
EXISTING FLAP GATE TO BE DEMOLISHED	

0 25' 50' 100'
1" = 50'

NOT FOR CONSTRUCTION

CONCEPT DESIGN

CLIENT:

CITY OF ANNAPOLIS
DEPARTMENT OF PUBLIC WORKS
161 DUKE OF GLOUCESTER ST.
ANNAPOLIS, MD 21401

I HEREBY CERTIFY THAT THESE DOCUMENTS WERE PREPARED OR APPROVED BY ME, AND THAT I AM A DULY LICENSED LANDSCAPE ARCHITECT UNDER THE LAWS OF THE STATE OF MARYLAND.

- DATE
- -
LICENSE NO. EXP. DATE

REVISION DESCRIPTION	BY	DATE

DESIGN BY:

AECOM
12420 MILESTONE CENTER DRIVE
SUITE 150
GERMANTOWN, MD 20876
(301) 820-3000
CONTACT: UMAR SHAHID, PE, PMP, LEED AP

CITY OF ANNAPOLIS

DEPARTMENT OF PUBLIC WORKS

APPROVED DATE	APPROVED DATE	SCALE: 1" = 50'	**EXISTING CONDITIONS & DEMOLITION PLAN**
		DRAWN BY: TC	
CHIEF ENGINEER	PROJECT MANAGER	CHECKED BY: US	
APPROVED DATE	APPROVED DATE	SHEET: 3 OF 12	**STORMWATER AND FLOOD MITIGATION ENGINEERING DESIGN SERVICES**
		PROJECT NO.: 60533093	
ASSISTANT CHIEF ENGINEER	CHIEF RIGHT-OF-WAY	CONTRACT NO.:	AECOM PROJECT #: 60533093

May 2017 FILE: C:\pwworking\aecom_na\tomas.concepcion\d0117005\60533093-Sht-20-Ph01-V-EX_Condition.dwg

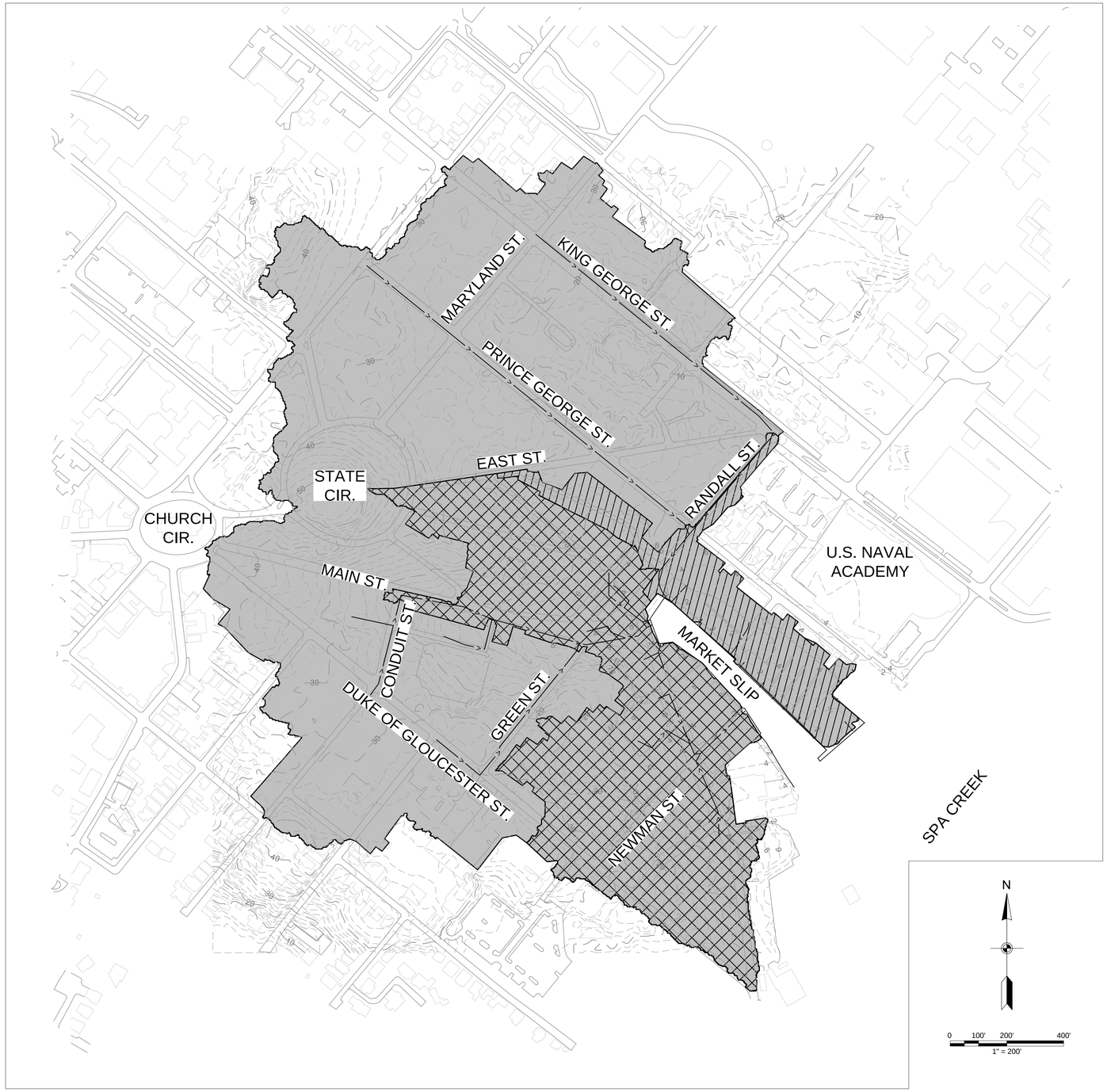

GENERAL NOTES:

1. EXISTING BUILDINGS, ROADWAY ALIGNMENTS AND TOPOGRAPHIC DATA ARE DERIVED FORM GIS DATA PROVIDED BY THE CITY OF ANNAPOLIS IN JANUARY, 2017.

DESIGN NOTES:

1. STORM DRAIN INLETS, CURB INLETS AND COMBINATION INLETS WITH TOP OF STRUCTURE ELEVATIONS BELOW BASE FLOOD ELEVATION 5.0 (NAVD88) TO BE REPLACED. SEPARATE STORM DRAIN SYSTEMS WILL BE CREATED IN WHICH RUNOFF IN THE "PUMP'S DRAINAGE AREA" WILL BE CONVEYED TO APPROPRIATE PUMP STATIONS.

LEGEND:

EXISTING MAJOR CONTOUR
EXISTING MINOR CONTOUR
EXISTING DRAINAGE AREA (90 ACRES)
FLOW PATH
PROP. DRAINAGE AREA TO NORTH PUMP (6 ACRES)
PROP. DRAINAGE AREA TO SOUTH PUMP (23 ACRES)

NOT FOR CONSTRUCTION — CONCEPT DESIGN

CLIENT:

CITY OF ANNAPOLIS
DEPARTMENT OF PUBLIC WORKS
161 DUKE OF GLOUCESTER ST.
ANNAPOLIS, MD 21401

I HEREBY CERTIFY THAT THESE DOCUMENTS WERE PREPARED OR APPROVED BY ME, AND THAT I AM A DULY LICENSED LANDSCAPE ARCHITECT UNDER THE LAWS OF THE STATE OF MARYLAND.

DATE

LICENSE NO. EXP. DATE

REVISION DESCRIPTION	BY	DATE

DESIGN BY:

AECOM

AECOM
12420 MILESTONE CENTER DRIVE
SUITE 150
GERMANTOWN, MD 20876
(301) 820-3000
CONTACT: UMAR SHAHID, PE, PMP, LEED AP

CITY OF ANNAPOLIS

DEPARTMENT OF PUBLIC WORKS

APPROVED DATE	APPROVED DATE	SCALE: 1" = 200'	**PROPOSED DRAINAGE AREA MAP**
		DRAWN BY: TC	
CHIEF ENGINEER	PROJECT MANAGER	CHECKED BY: US	**STORMWATER AND FLOOD MITIGATION ENGINEERING DESIGN SERVICES**
APPROVED DATE	APPROVED DATE	SHEET: 4 OF 12	
		PROJECT NO.: 60533093	
ASSISTANT CHIEF ENGINEER	CHIEF RIGHT-OF-WAY	CONTRACT NO.:	AECOM PROJECT #: 60533093

May 2017 FILE: C:\pwworking\aecom_na\tomas.concepcion\d0117005\60533093-SHT-20-PH01-C-Drainage_Area.dwg

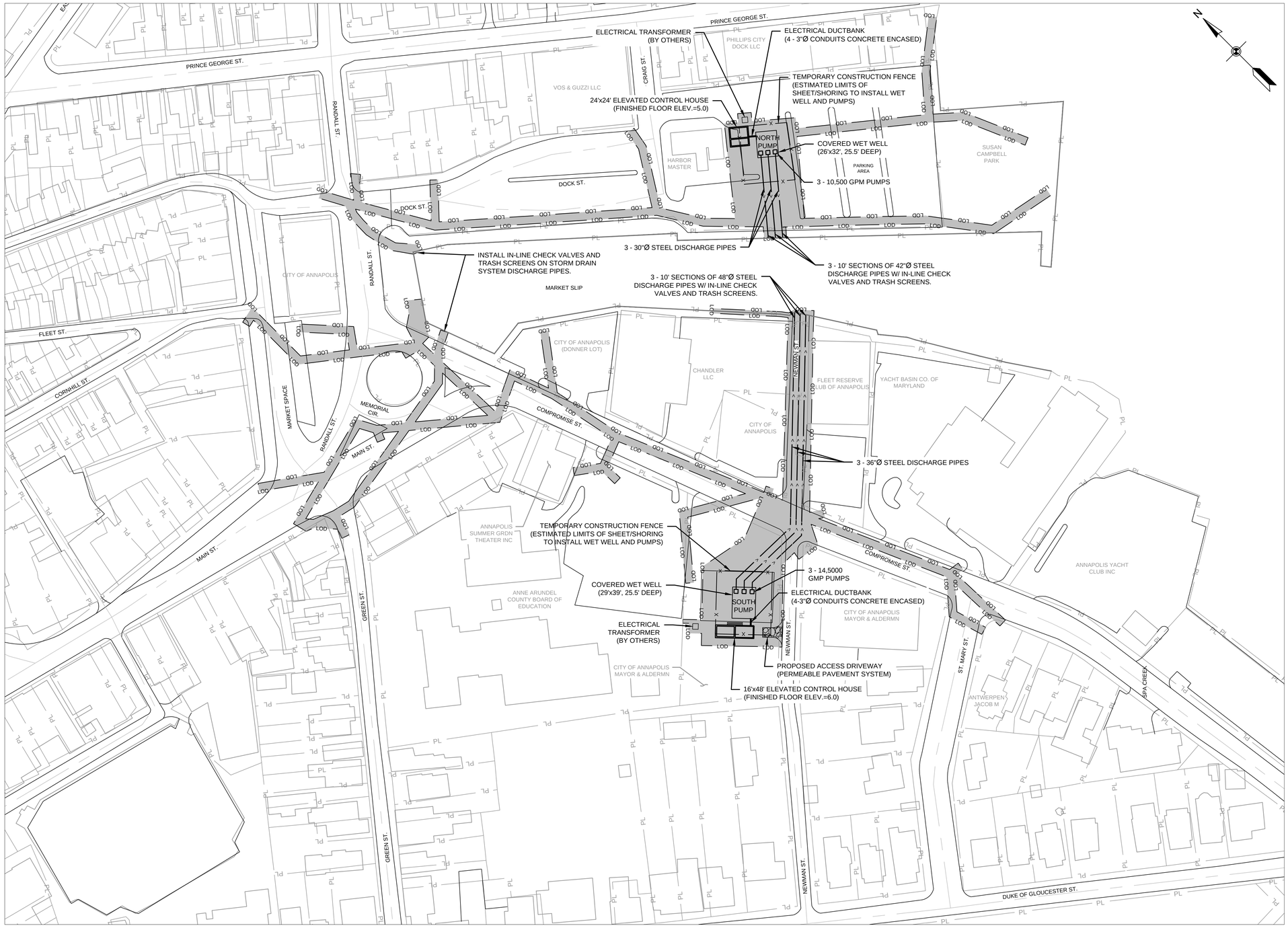

GENERAL NOTES:

1. EXISTING BUILDINGS, ROADWAY ALIGNMENTS AND TOPOGRAPHIC DATA ARE DERIVED FORM GIS DATA PROVIDED BY THE CITY OF ANNAPOLIS IN JANUARY, 2017.

DESIGN NOTES:

1. ALL PROPOSED ELEVATION ARE BASED ON VERTICAL DATUM NAVD88. HORIZONTAL DATUM IS NAD83.
2. FINISHED FLOOR ELEVATIONS TO BE ABOVE TOTAL OF 100-YEAR FLOOD ELEVATION PLUS FREEBOARD ELEVATION.
3. ALL CURB & GUTTER, SIDEWALKS, PLAZAS, SIGNS, ETC. DISTURBED OR DAMAGED DURING CONSTRUCTION ARE TO BE REPLACED IN-KIND.
4. APPROXIMATE LIMITS OF DISTURBANCE = 1.80 ACRES.
5. DUE TO AN INCREASE IN IMPERVIOUS AREA, STORMWATER MANAGEMENT WILL BE NECESSARY FOR THIS PROJECT. SIZE AND LOCATION OF BEST MANAGEMENT PRACTICES WILL BE SET AT NEXT PHASE OF DESIGN.
6. PLANTING AND RESTORATION PLANS FOR CRITICAL AREA DISTURBANCES WILL BE DEVELOPED IN SUBSEQUENT PHASES OF DESIGN.

LEGEND:

LIMITS OF DISTURBANCE — LOD
PUMP DISCHARGE PIPES — > >
TEMPORARY CONSTRUCTION FENCE — x x

0 30' 60' 120'
1" = 60'

May 2017 FILE: C:\pwworking\aecom_na\tomas.concepcion\d0117005\60533093-SHT-20-PH01-C-SITE PLAN.dwg

NOT FOR CONSTRUCTION — CONCEPT DESIGN

CLIENT:

CITY OF ANNAPOLIS
DEPARTMENT OF PUBLIC WORKS
161 DUKE OF GLOUCESTER ST.
ANNAPOLIS, MD 21401

I HEREBY CERTIFY THAT THESE DOCUMENTS WERE PREPARED OR APPROVED BY ME, AND THAT I AM A DULY LICENSED LANDSCAPE ARCHITECT UNDER THE LAWS OF THE STATE OF MARYLAND.

- DATE
LICENSE NO. EXP. DATE

REVISION DESCRIPTION	BY	DATE

DESIGN BY:

AECOM
12420 MILESTONE CENTER DRIVE
SUITE 150
GERMANTOWN, MD 20876
(301) 820-3000
CONTACT: UMAR SHAHID, PE, PMP, LEED AP

CITY OF ANNAPOLIS

DEPARTMENT OF PUBLIC WORKS

APPROVED DATE	APPROVED DATE	SCALE: 1" = 60'	**SITE PLAN**
CHIEF ENGINEER	PROJECT MANAGER	DRAWN BY: TC CHECKED BY: US	**STORMWATER AND FLOOD MITIGATION ENGINEERING DESIGN SERVICES**
APPROVED DATE	APPROVED DATE	SHEET: 5 OF 12 PROJECT NO.: 60533093	
ASSISTANT CHIEF ENGINEER	CHIEF RIGHT-OF-WAY	CONTRACT NO.:	AECOM PROJECT #: 60533093

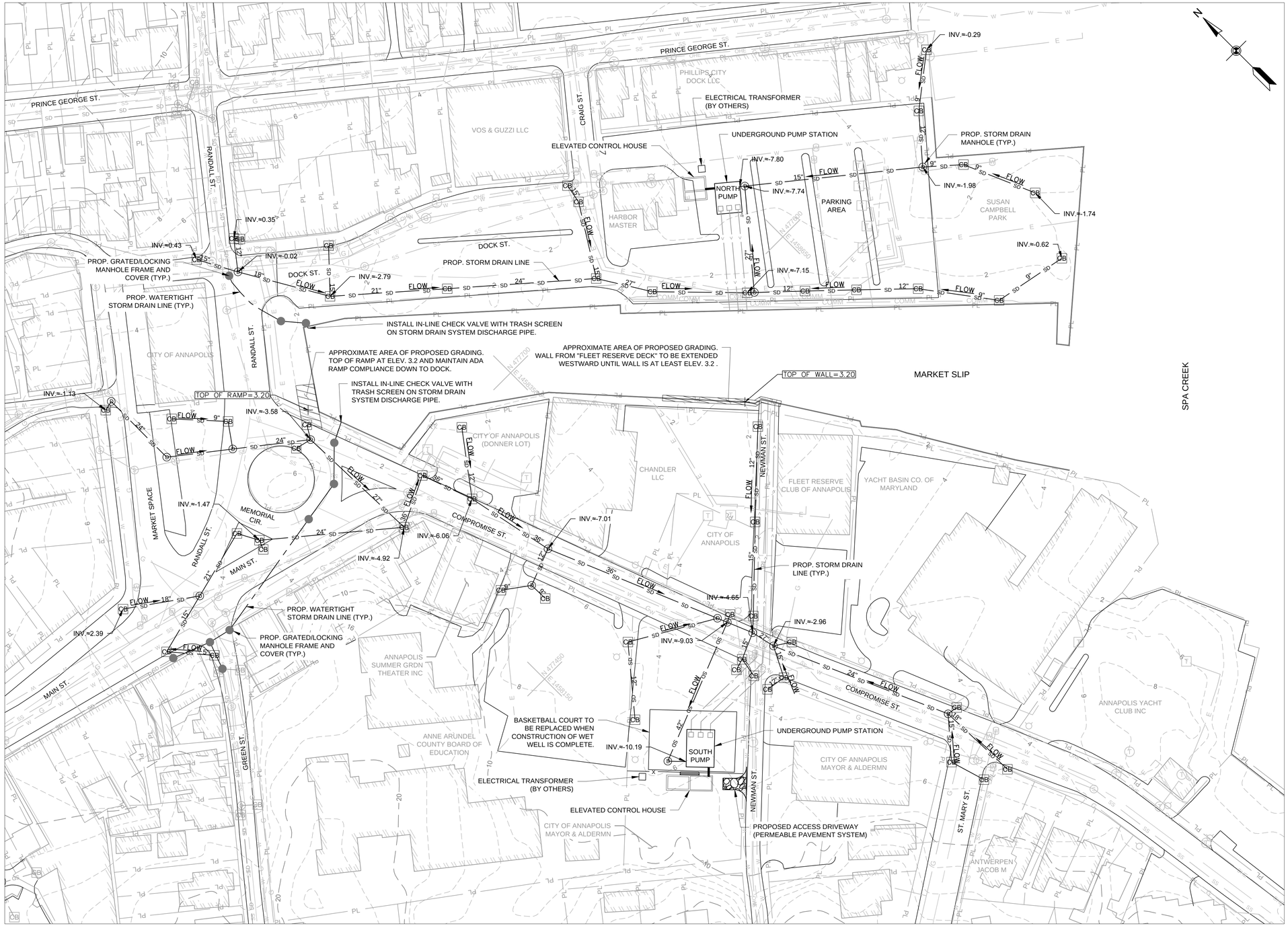

GENERAL NOTES:

1. EXISTING BUILDINGS, ROADWAY ALIGNMENTS AND TOPOGRAPHIC DATA ARE DERIVED FORM GIS DATA PROVIDED BY THE CITY OF ANNAPOLIS IN JANUARY, 2017.
2. LOCATIONS OF UNDERGROUND ELECTRIC LINES, OVERHEAD ELECTRIC LINES, POWER POLES, GAS LINE AND COMMUNICATION LINES ARE FOR INFORMATIONAL PURPOSES ONLY. PLEASE USE A LOCATING SERVICE FOR EXACT MARKINGS.

DESIGN NOTES:

1. ALL PROPOSED ELEVATIONS ARE BASED ON VERTICAL DATUM NAVD88. HORIZONTAL DATUM IS NAD83.
2. STORM DRAIN INLETS--CURB INLETS AND COMBINATION INLETS--WITH CREST ELEVATIONS BELOW BASE FLOOD ELEVATION 5.0 (NAVD88) TO BE REPLACED. A SEPARATE STORM DRAIN SYSTEM WILL BE CREATED IN WHICH RUNOFF IN THE "PUMP'S DRAINAGE AREA" WILL BE CONVEYED TO PUMP STATIONS.
3. RUNOFF THAT ENTERS THE STORM DRAIN SYSTEM ABOVE BASE FLOOD ELEVATION 5.0 (NAVD88) WILL BE CONVEYED DIRECTLY TO MARKET SLIP. CORRESPONDING STORM DRAIN STRUCTURES--MANHOLES AND JUNCTIONS--WILL BE RENDERED WATERTIGHT.
4. ALL CURB & GUTTER, SIDEWALKS, PLAZAS, SIGNS, ETC. DISTURBED OR DAMAGED DURING CONSTRUCTION ARE TO BE REPLACED IN-KIND.

LEGEND:

MAJOR CONTOUR	10
MINOR CONTOUR	4
PROPERTY LINE	PL
ROAD CENTERLINE	
STORM DRAIN LINE	SD SD
STORM DRAIN MANHOLE	D
STORM DRAIN INLET	CB
SANITARY SEWER LINE	SS SS
SANITARY SEWER MANHOLE	S
WATER LINE	W W
WATER STRUCTURE	M
UNDERGROUND ELECTRIC LINE	E
TRANSFORMER (UGE LINE)	T
OVERHEAD ELECTRIC LINE	OHE OHE
TRANSFORMER (OHE LINE)	T
GAS LINE	GAS GAS
GAS STRUCTURE	G
COMMUNICATION LINE	COMM
POWER POLE	
PROP. STORM DRAIN LINE	SD SD
PROP. WATERTIGHT STORM DRAIN LINE	
PROP. GRATED/LOCKING MANHOLE FRAME AND COVER	
PROP. STORM DRAIN MANHOLE	D
REPLACED STORM DRAIN INLET	CB
PROP. GRADING	

0 25' 50' 100'
1" = 50'

NOT FOR CONSTRUCTION

CONCEPT DESIGN

CLIENT:

CITY OF ANNAPOLIS
DEPARTMENT OF PUBLIC WORKS
161 DUKE OF GLOUCESTER ST.
ANNAPOLIS, MD 21401

I HEREBY CERTIFY THAT THESE DOCUMENTS WERE PREPARED OR APPROVED BY ME, AND THAT I AM A DULY LICENSED LANDSCAPE ARCHITECT UNDER THE LAWS OF THE STATE OF MARYLAND.

- DATE
- -
LICENSE NO. EXP. DATE

REVISION DESCRIPTION	BY	DATE

DESIGN BY:

AECOM
12420 MILESTONE CENTER DRIVE
SUITE 150
GERMANTOWN, MD 20876
(301) 820-3000
CONTACT: UMAR SHAHID, PE, PMP, LEED AP

CITY OF ANNAPOLIS

DEPARTMENT OF PUBLIC WORKS

APPROVED DATE	APPROVED DATE	SCALE: 1" = 50'	**PROPOSED CONDITIONS**
		DRAWN BY: TC	
CHIEF ENGINEER	PROJECT MANAGER	CHECKED BY: US	**STORMWATER AND FLOOD MITIGATION ENGINEERING DESIGN SERVICES**
APPROVED DATE	APPROVED DATE	SHEET: 6 OF 12	
		PROJECT NO.: 60533093	
ASSISTANT CHIEF ENGINEER	CHIEF RIGHT-OF-WAY	CONTRACT NO.:	AECOM PROJECT #: 60533093

May 2017 FILE: C:\pwworking\aecom_na\tomas.concepcion\d0117005\60533093-Sht-20-Ph01-C-PROP_Condition.dwg

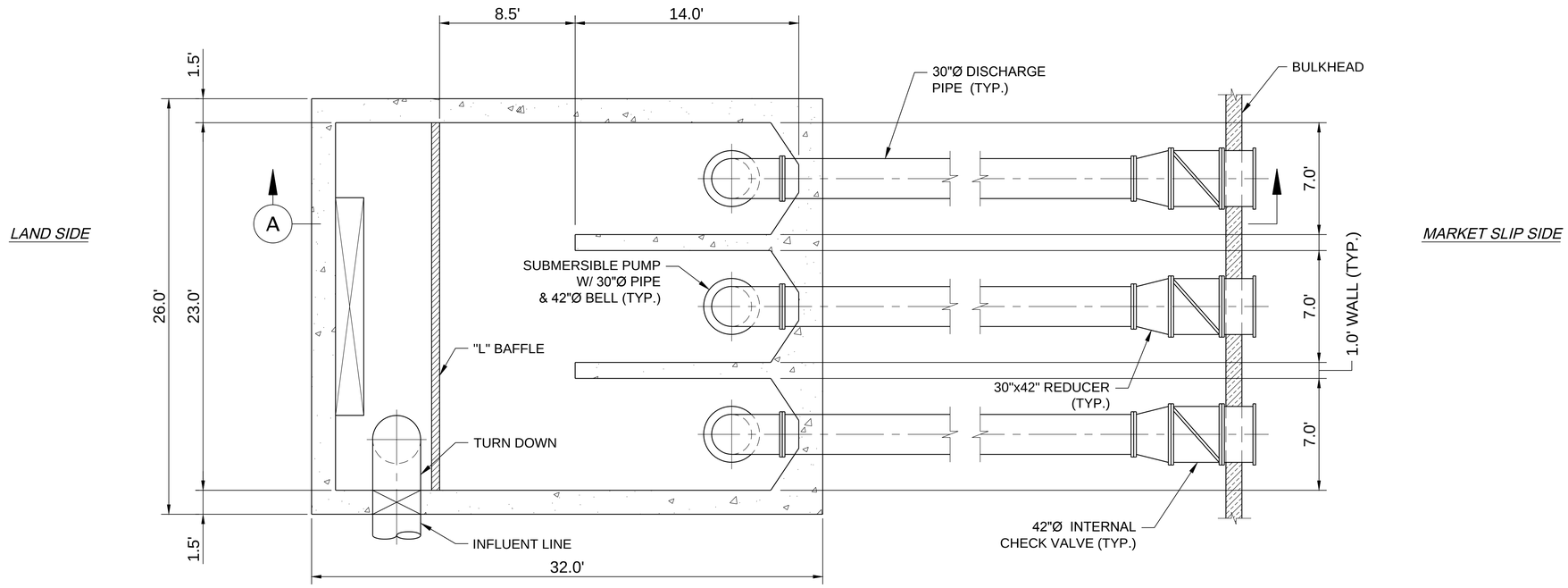

NORTH PUMP STATION - PLAN VIEW

SCALE: 3"=1'-0"

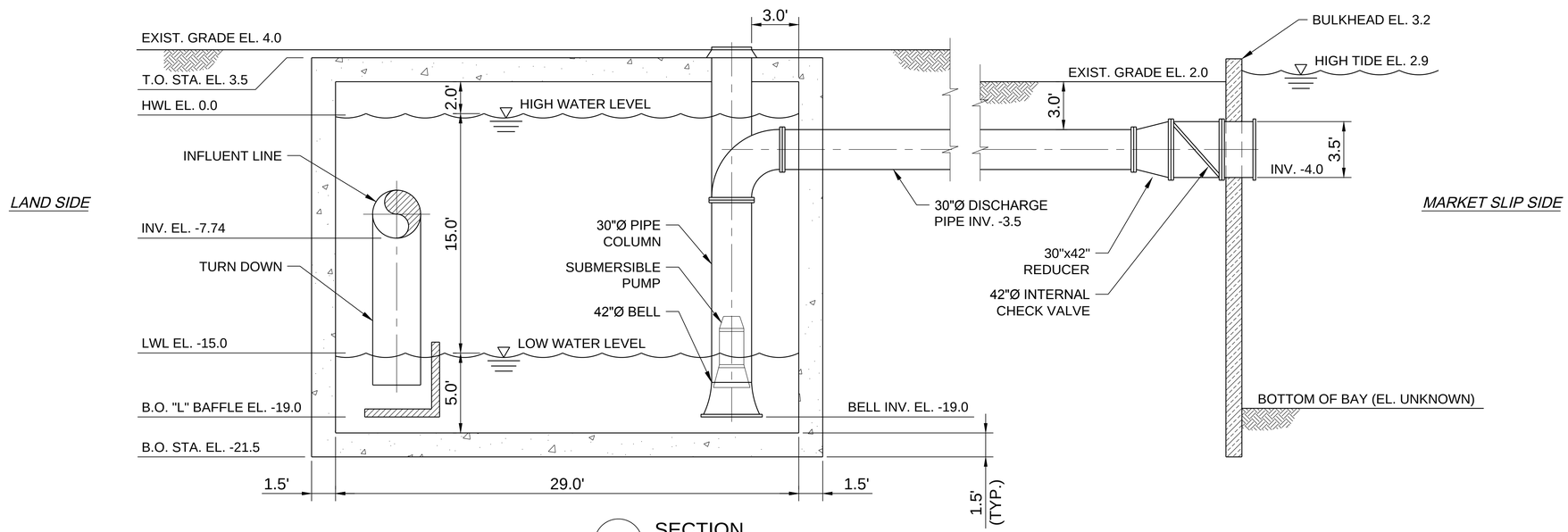

A SECTION

SCALE: 3"=1'-0"

3" 0 3" 6"

SCALE: 3"=1'-0"

NOT FOR CONSTRUCTION

CONCEPT DESIGN

CLIENT:

CITY OF ANNAPOLIS
DEPARTMENT OF PUBLIC WORKS
161 DUKE OF GLOUCESTER ST.
ANNAPOLIS, MD 21401

I HEREBY CERTIFY THAT THESE DOCUMENTS WERE PREPARED OR APPROVED BY ME, AND THAT I AM A DULY LICENSED LANDSCAPE ARCHITECT UNDER THE LAWS OF THE STATE OF MARYLAND.

- DATE

- -

LICENSE NO. EXP. DATE

REVISION DESCRIPTION	BY	DATE

DESIGN BY:

AECOM

AECOM
12420 MILESTONE CENTER DRIVE
SUITE 150
GERMANTOWN, MD 20876
(301) 820-3000
CONTACT: UMAR SHAHID, PE, PMP, LEED AP

CITY OF ANNAPOLIS

DEPARTMENT OF PUBLIC WORKS

APPROVED DATE	APPROVED DATE	SCALE: AS NOTED	**NORTH PUMP STATION**
CHIEF ENGINEER	PROJECT MANAGER	DRAWN BY: EW	
		CHECKED BY: CL	**STORMWATER AND FLOOD MITIGATION ENGINEERING DESIGN SERVICES**
APPROVED DATE	APPROVED DATE	SHEET: 7 OF 12	
		PROJECT NO.: 60533093	
ASSISTANT CHIEF ENGINEER	CHIEF RIGHT-OF-WAY	CONTRACT NO.:	AECOM PROJECT #: 60533093

May 2017 FILE: C:\Users\eric_walter\appdata\local\temp\AcPublish_10184\Mechanical Section.dwg

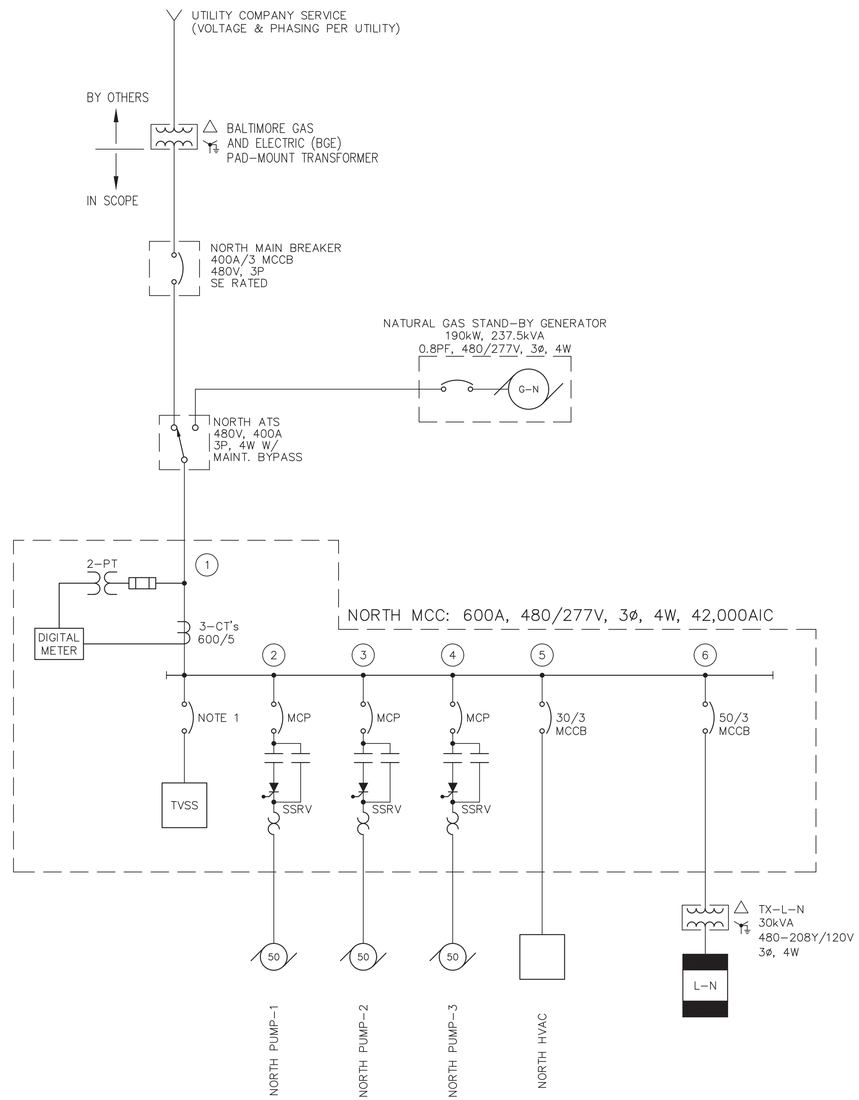

LEGEND

- GENERATOR
- MOTOR, HP INDICATES HORSE-POWER
- CIRCUIT BREAKER, SEE SINGLE LINE FOR RATINGS
- AUTOMATIC TRANSFER SWITCH (ATS) SEE SINGLE LINE FOR RATINGS
- ENCLOSURE FOR ELECTRICAL DEVICES OR EQUIPMENT
- DEVICE NEEDING ELECTRICAL CONNECTIONS
- BREAKER PANEL, 240V OR LESS SEE SINGLE LINE FOR RATINGS
- TRANSFORMER, SEE SINGLE LINE FOR RATINGS
- THREE PHASE TRANSFORMER CONNECTION DIAGRAM
- FUSE, SEE SINGLE LINE FOR RATINGS
- POTENTIAL TRANSFORMER (PT) SEE SINGLE LINE FOR RATINGS

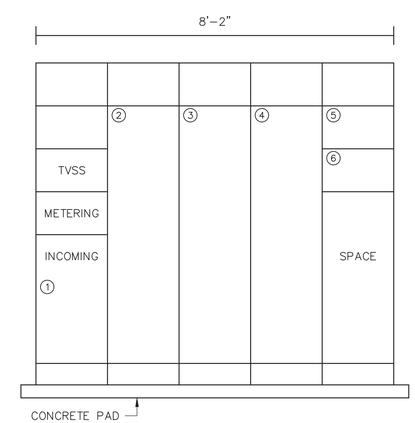

NORTH MCC FRONT ELEVATION

N.T.S.

NOT FOR CONSTRUCTION **CONCEPT DESIGN**

CLIENT:

CITY OF ANNAPOLIS
DEPARTMENT OF PUBLIC WORKS
161 DUKE OF GLOUCESTER ST.
ANNAPOLIS, MD 21401

I HEREBY CERTIFY THAT THESE DOCUMENTS WERE PREPARED OR APPROVED BY ME, AND THAT I AM A DULY LICENSED LANDSCAPE ARCHITECT UNDER THE LAWS OF THE STATE OF MARYLAND.

- DATE

LICENSE NO. EXP. DATE

REVISION DESCRIPTION	BY	DATE

DESIGN BY:

AECOM

AECOM
12420 MILESTONE CENTER DRIVE
SUITE 150
GERMANTOWN, MD 20876
(301) 820-3000
CONTACT: UMAR SHAHID, PE, PMP, LEED AP

CITY OF ANNAPOLIS

DEPARTMENT OF PUBLIC WORKS

APPROVED DATE	APPROVED DATE	SCALE: NONE	**NORTH PUMP STATION SINGLE-LINE**
		DRAWN BY: DRK	
CHIEF ENGINEER	PROJECT MANAGER	CHECKED BY: JWH	**STORMWATER AND FLOOD MITIGATION ENGINEERING DESIGN SERVICES**
APPROVED DATE	APPROVED DATE	SHEET: 8 OF 12	
		PROJECT NO.: 60533093	
ASSISTANT CHIEF ENGINEER	CHIEF RIGHT-OF-WAY	CONTRACT NO.:	AECOM PROJECT #: 60533093

May 2017 FILE: K:\AECOM GERMANTOWN\60533093 Annapolis Storm Drain Flood Mitigation Design Service\900-CAD GIS\910-CAD\20-Sheets\North 1Line.dwg

NOTES:
1. FINISHED FLOOR ELEVATION TO BE ABOVE TOTAL OF 100 YEAR FLOOD ELEVATION AND FREEBOARD ELEVATION.
2. FINISHED CEILING IS TO BE 10'-0" AFF MIN.
3. PROVIDE PLATFORM IN GENERATOR YARD TO ELEVATE AIR CONDITIONING SYSTEM ABOVE 100 YEAR FLOOD ELEVATION.

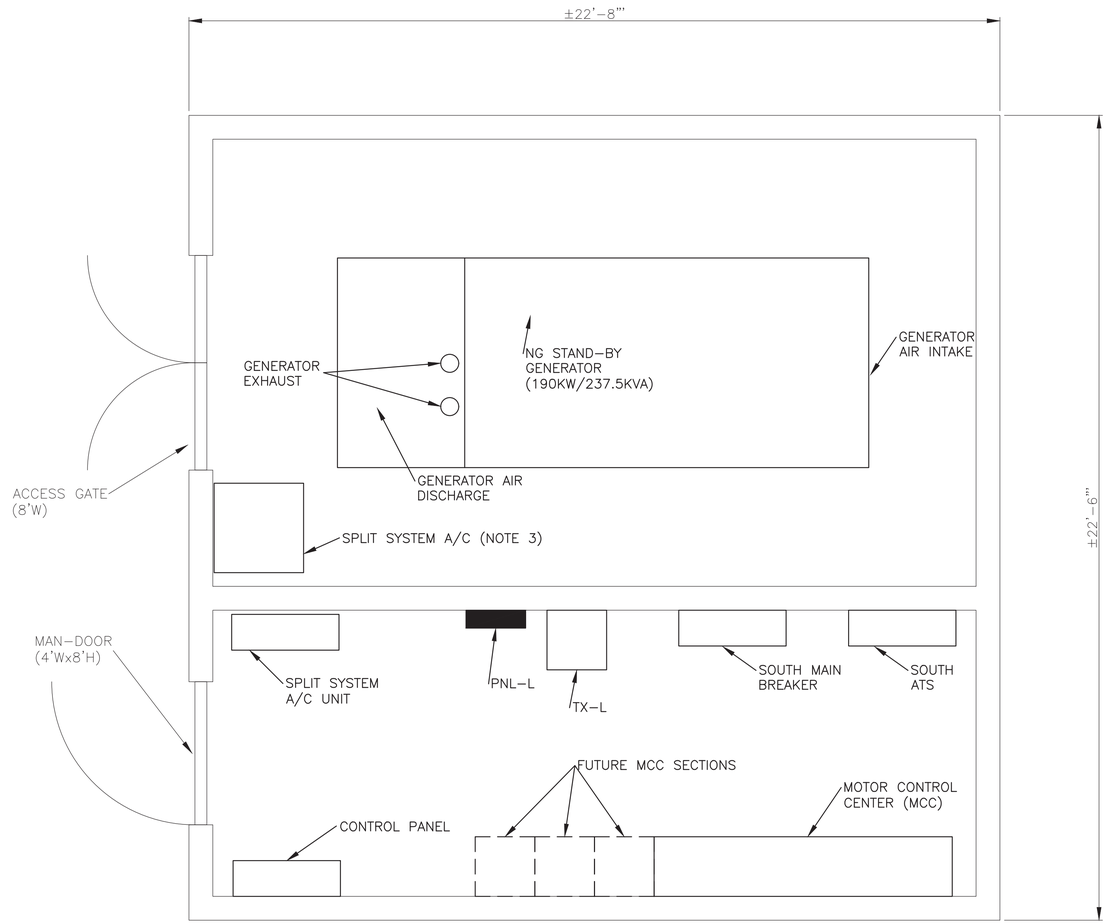

ELECTRICAL BUILDING PLAN

SCALE: 1/2" = 1'-0"

NOTE: THIS LINE IS 1" LONG WHEN PLOTTED FULL SIZE.

NOT FOR CONSTRUCTION

CONCEPT DESIGN

CLIENT:

CITY OF ANNAPOLIS
DEPARTMENT OF PUBLIC WORKS
161 DUKE OF GLOUCESTER ST.
ANNAPOLIS, MD 21401

I HEREBY CERTIFY THAT THESE DOCUMENTS WERE PREPARED OR APPROVED BY ME, AND THAT I AM A DULY LICENSED LANDSCAPE ARCHITECT UNDER THE LAWS OF THE STATE OF MARYLAND.

LICENSE NO. EXP. DATE

REVISION DESCRIPTION	BY	DATE

DESIGN BY:

AECOM
12420 MILESTONE CENTER DRIVE
SUITE 150
GERMANTOWN, MD 20876
(301) 820-3000
CONTACT: UMAR SHAHID, PE, PMP, LEED AP

CITY OF ANNAPOLIS

DEPARTMENT OF PUBLIC WORKS

APPROVED DATE	APPROVED DATE	SCALE: AS SHOWN	NORTH PUMP STATION LAYOUT
		DRAWN BY: DRK	STORMWATER AND FLOOD MITIGATION ENGINEERING DESIGN SERVICES
CHIEF ENGINEER	PROJECT MANAGER	CHECKED BY: JWH	
APPROVED DATE	APPROVED DATE	SHEET: 9 OF 12	
		PROJECT NO.: 60533093	
ASSISTANT CHIEF ENGINEER	CHIEF RIGHT-OF-WAY	CONTRACT NO.:	AECOM PROJECT #: 60533093

May 2017 FILE: K:\AECOM GERMANTOWN\60533093 Annapolis Storm Drain Flood Mitigation Design Service\900-CAD GIS\910-CAD\20-Sheets\North Layout.DWG

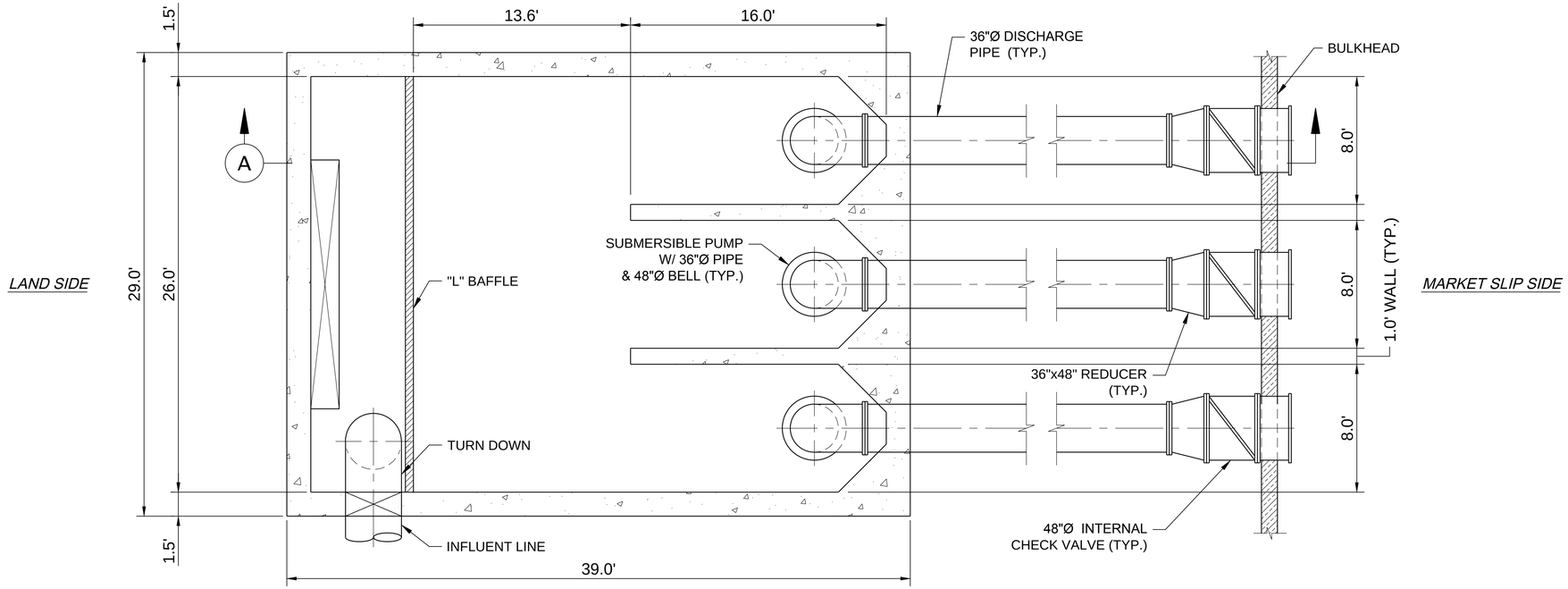

SOUTH PUMP STATION - PLAN VIEW

SCALE: 3"=1'-0"

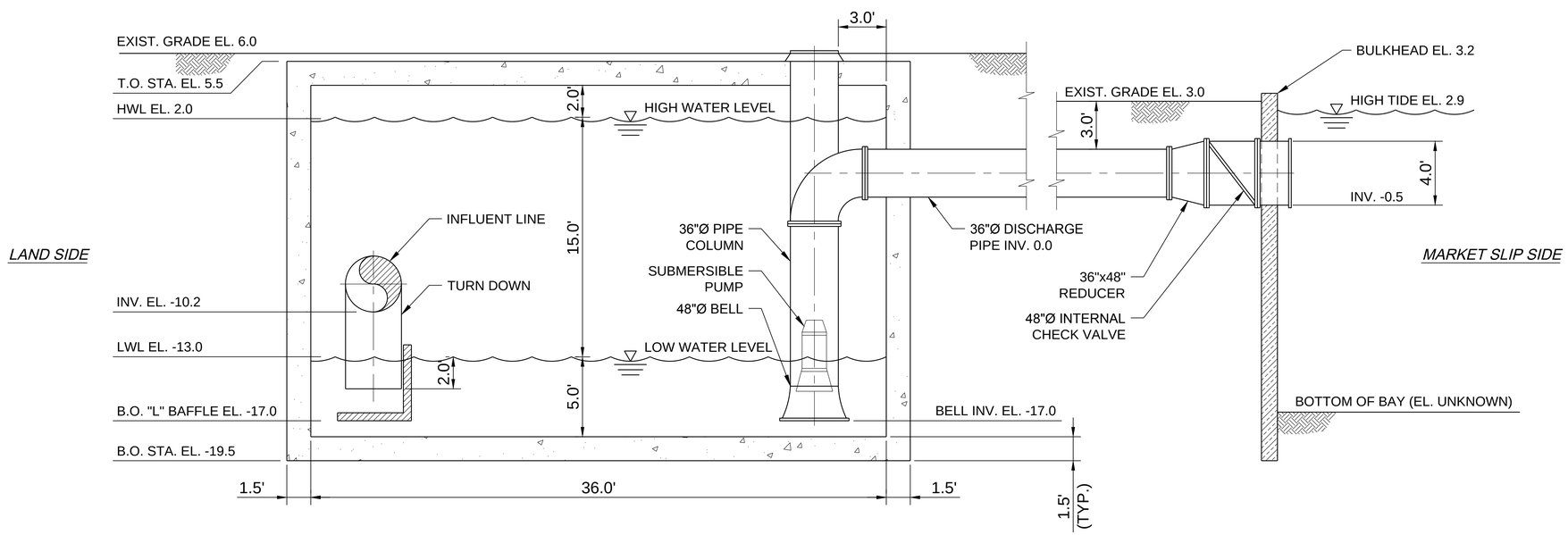

A SECTION

SCALE: 3"=1'-0"

3" 0 3" 6"

SCALE: 3"=1'-0"

NOT FOR CONSTRUCTION

CONCEPT DESIGN

CLIENT:

CITY OF ANNAPOLIS
DEPARTMENT OF PUBLIC WORKS
161 DUKE OF GLOUCESTER ST.
ANNAPOLIS, MD 21401

I HEREBY CERTIFY THAT THESE DOCUMENTS WERE PREPARED OR APPROVED BY ME, AND THAT I AM A DULY LICENSED LANDSCAPE ARCHITECT UNDER THE LAWS OF THE STATE OF MARYLAND.

- DATE
- -
LICENSE NO. EXP. DATE

REVISION DESCRIPTION	BY	DATE

DESIGN BY:

AECOM

AECOM
12420 MILESTONE CENTER DRIVE
SUITE 150
GERMANTOWN, MD 20876
(301) 820-3000
CONTACT: UMAR SHAHID, PE, PMP, LEED AP

CITY OF ANNAPOLIS

DEPARTMENT OF PUBLIC WORKS

APPROVED DATE	APPROVED DATE	SCALE: AS NOTED	**SOUTH PUMP STATION**
CHIEF ENGINEER	PROJECT MANAGER	DRAWN BY: EW	**STORMWATER AND FLOOD MITIGATION ENGINEERING DESIGN SERVICES**
APPROVED DATE	APPROVED DATE	CHECKED BY: CL	
ASSISTANT CHIEF ENGINEER	CHIEF RIGHT-OF-WAY	SHEET: 10 OF 12	
		PROJECT NO.: 60533093	
		CONTRACT NO.:	AECOM PROJECT #: 60533093

May 2017 FILE: C:\Users\eric.walter\appdata\local\temp\AcPublish_10184\Mechanical Section.dwg

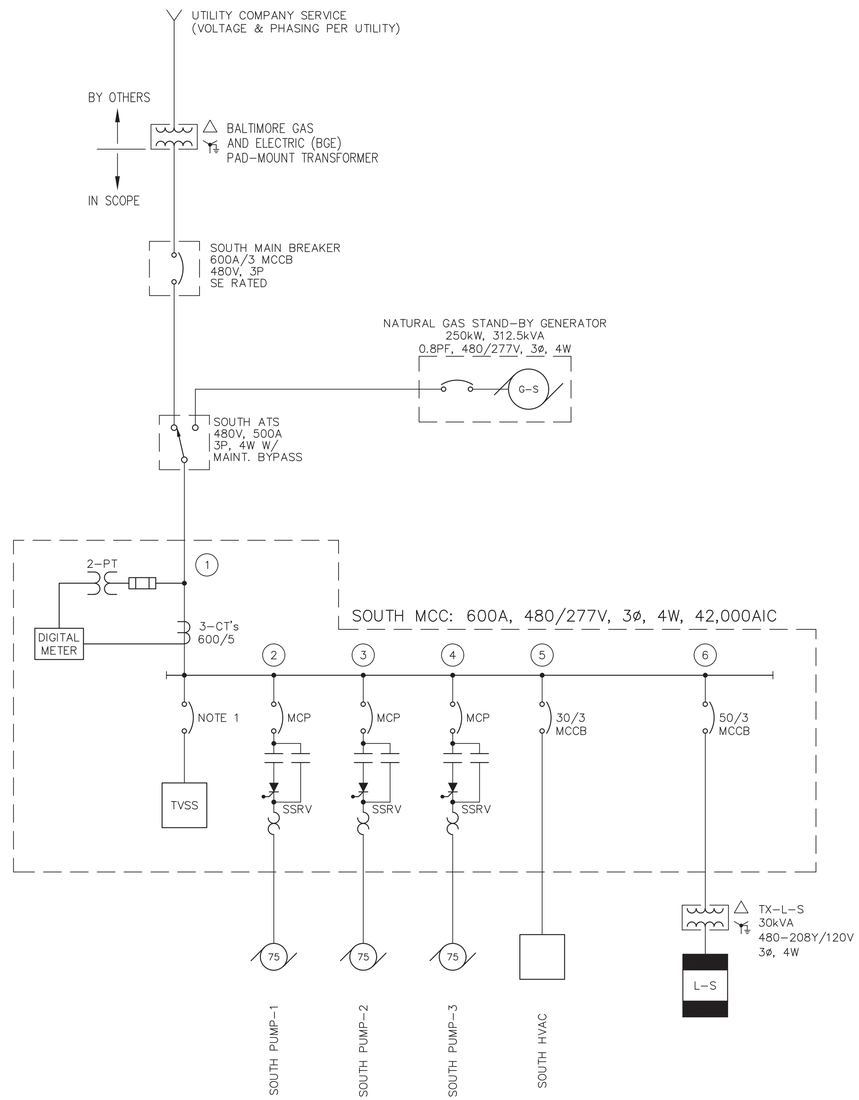

LEGEND

- GENERATOR
- MOTOR, HP INDICATES HORSE-POWER
- CIRCUIT BREAKER, SEE SINGLE LINE FOR RATINGS
- AUTOMATIC TRANSFER SWITCH (ATS) SEE SINGLE LINE FOR RATINGS
- ENCLOSURE FOR ELECTRICAL DEVICES OR EQUIPMENT
- DEVICE NEEDING ELECTRICAL CONNECTIONS
- BREAKER PANEL, 240V OR LESS SEE SINGLE LINE FOR RATINGS
- TRANSFORMER, SEE SINGLE LINE FOR RATINGS
- THREE PHASE TRANSFORMER CONNECTION DIAGRAM
- FUSE, SEE SINGLE LINE FOR RATINGS
- POTENTIAL TRANSFORMER (PT) SEE SINGLE LINE FOR RATINGS

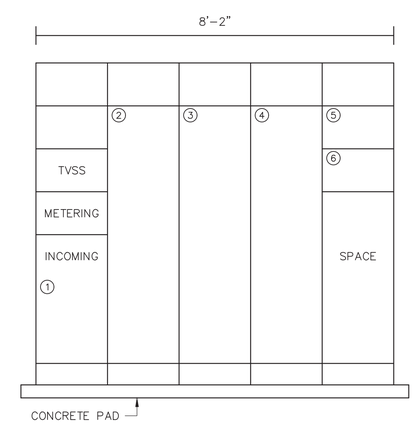

SOUTH MCC FRONT ELEVATION

N.T.S.

NOT FOR CONSTRUCTION **CONCEPT DESIGN**

CLIENT:

CITY OF ANNAPOLIS
DEPARTMENT OF PUBLIC WORKS
161 DUKE OF GLOUCESTER ST.
ANNAPOLIS, MD 21401

I HEREBY CERTIFY THAT THESE DOCUMENTS WERE PREPARED OR APPROVED BY ME, AND THAT I AM A DULY LICENSED LANDSCAPE ARCHITECT UNDER THE LAWS OF THE STATE OF MARYLAND.

- DATE

LICENSE NO. EXP. DATE

REVISION DESCRIPTION	BY	DATE

DESIGN BY:

AECOM

AECOM
12420 MILESTONE CENTER DRIVE
SUITE 150
GERMANTOWN, MD 20876
(301) 820-3000
CONTACT: UMAR SHAHID, PE, PMP, LEED AP

CITY OF ANNAPOLIS

DEPARTMENT OF PUBLIC WORKS

APPROVED DATE	APPROVED DATE	SCALE: NONE	**SOUTH PUMP STATION SINGLE-LINE**
		DRAWN BY: DRK	
CHIEF ENGINEER	PROJECT MANAGER	CHECKED BY: JWH	**STORMWATER AND FLOOD MITIGATION ENGINEERING DESIGN SERVICES**
APPROVED DATE	APPROVED DATE	SHEET: 11 OF 12	
		PROJECT NO.: 60533093	
ASSISTANT CHIEF ENGINEER	CHIEF RIGHT-OF-WAY	CONTRACT NO.:	AECOM PROJECT #: 60533093

May 2017 FILE: K:\AECOM GERMANTOWN\60533093 Annapolis Storm Drain Flood Mitigation Design Service\900-CAD GIS\910-CAD\20-Sheets\South 1Line.dwg

NOTES:
1. FINISHED FLOOR ELEVATION TO BE ABOVE TOTAL OF 100 YEAR FLOOD ELEVATION PLUS FREEBOARD ELEVATION.
2. FINISHED CEILING IS TO BE 10'-0" AFF MIN.
3. PROVIDE PLATFORM IN GENERATOR YARD TO ELEVATE AIR CONDITIONING SYSTEM ABOVE 100 YEAR FLOOD ELEVATION.

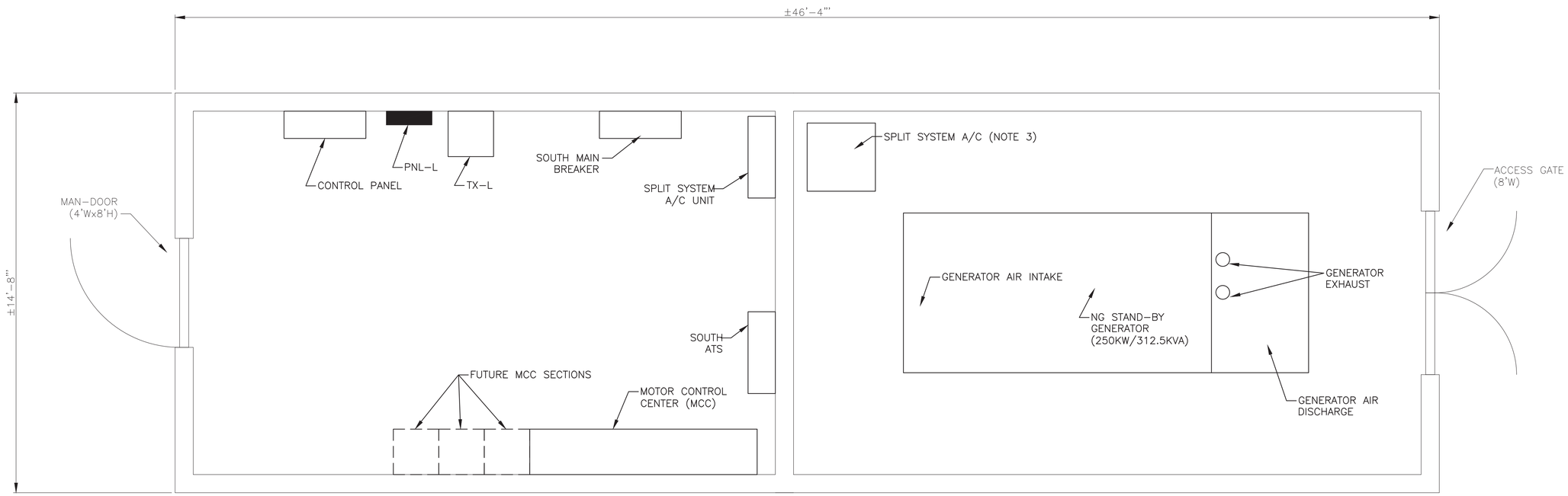

ELECTRICAL BUILDING PLAN

SCALE: 1/2" = 1'-0"

NOTE: THIS LINE IS 1" LONG WHEN PLOTTED FULL SIZE.

NOT FOR CONSTRUCTION **CONCEPT DESIGN**

CLIENT:

CITY OF ANNAPOLIS
DEPARTMENT OF PUBLIC WORKS
161 DUKE OF GLOUCESTER ST.
ANNAPOLIS, MD 21401

I HEREBY CERTIFY THAT THESE DOCUMENTS WERE PREPARED OR APPROVED BY ME, AND THAT I AM A DULY LICENSED LANDSCAPE ARCHITECT UNDER THE LAWS OF THE STATE OF MARYLAND.

DATE

LICENSE NO. EXP. DATE

REVISION DESCRIPTION	BY	DATE

DESIGN BY:

AECOM

AECOM
12420 MILESTONE CENTER DRIVE
SUITE 150
GERMANTOWN, MD 20876
(301) 820-3000
CONTACT: UMAR SHAHID, PE, PMP, LEED AP

CITY OF ANNAPOLIS

DEPARTMENT OF PUBLIC WORKS

APPROVED DATE	APPROVED DATE	SCALE: AS SHOWN	**SOUTH PUMP STATION LAYOUT**
		DRAWN BY: DRK	
CHIEF ENGINEER	PROJECT MANAGER	CHECKED BY: JWH	**STORMWATER AND FLOOD MITIGATION ENGINEERING DESIGN SERVICES**
APPROVED DATE	APPROVED DATE	SHEET: 12 OF 12	
		PROJECT NO.: 60533093	
ASSISTANT CHIEF ENGINEER	CHIEF RIGHT-OF-WAY	CONTRACT NO.:	AECOM PROJECT #: 60533093

May 2017 FILE: K:\AECOM GERMANTOWN\60533093 Annapolis Storm Drain Flood Mitigation Design Service\900-CAD GIS\910-CAD\20-Sheets\South Layout.DWG

Appendix C
Cost Estimates

AECOM

Engineer’s Construction Cost Estimate

City of Annapolis
Stormwater and Flood Mitigation Engineering Design Services
Construction Cost Estimate
Concept Submittal
May 2, 2017

Item	Description	Quantity	Unit	Unit Price	Total
1.0	**General Conditions**				
1.1	*Mobilization/ Demobilization/ General Conditions* (1)	1	LS	$ 624,500.00	$ 624,500.00
1.2	*Site Survey Control* (2)	10	DAY	$ 1,500.00	$ 15,000.00
1.3	*Traffic Controls*	1	LS	$ 100,000.00	$ 100,000.00
2.0	**Demolition**				
2.1	*Bituminous Pavement Demolition*	1,550	CY	$ 40.00	$ 62,000.00
2.2	*Brick Pavers*	820	SF	$ 15.00	$ 12,300.00
2.3	*5" Storm Drain Pipe*	225	LF	$ 30.00	$ 6,750.00
2.4	*6" Storm Drain Pipe*	7	LF	$ 30.00	$ 210.00
2.5	*8" Storm Drain Pipe*	163	LF	$ 30.00	$ 4,890.00
2.6	*12" Storm Drain Pipe*	732	LF	$ 30.00	$ 21,960.00
2.7	*15" Storm Drain Pipe*	306	LF	$ 40.00	$ 12,240.00
2.8	*18" Storm Drain Pipe*	379	LF	$ 40.00	$ 15,160.00
2.9	*24" Storm Drain Pipe*	152	LF	$ 40.00	$ 6,080.00
2.10	*27" Storm Drain Pipe*	132	LF	$ 60.00	$ 7,920.00
2.11	*48" Storm Drain Pipe*	87	LF	$ 70.00	$ 6,090.00
2.12	*Storm Drain Manholes*	9	EA	$ 1,500.00	$ 13,500.00
2.13	*Storm Drain Junction Manholes*	3	EA	$ 1,500.00	$ 4,500.00
2.14	*Storm Drain Grate Inlet*	33	EA	$ 250.00	$ 8,250.00
2.15	*Storm Drain Curb Inlet*	13	EA	$ 250.00	$ 3,250.00
2.16	*Storm Drain Combination Inlet*	8	EA	$ 250.00	$ 2,000.00
2.18	*Playground/ Basketball Court*	1	EA	$ 2,500.00	$ 2,500.00
2.19	*Remove and Reset Existing Fence*	110	LF	$ 25.00	$ 2,750.00
3.0	**North Pump Station**				
3.1	*Mechanical/Electrical System*				
3.1.1	*Electrical Control Panels*	1	EA	$ 196,670.00	$ 196,670.00
3.1.2	*Electrical Ductbanks*	1	EA	$ 12,000.00	$ 12,000.00
3.2	*Aboveground Control Structure with Standby Generator Enclosure (building shell only - excludes MEP and Site Work)*	576	SF	$ 325.00	$ 187,200.00
3.3	*Generators*	1	EA	$ 89,660.00	$ 89,660.00
3.4	*Wet Well*				
3.4.1	*Structural Shoring, Steel Sheet Piling, PZ-27, Furnish Install and Abandon In Place (36'x42' perimeter, 60' long sheets)*	9,360	SF	$ 28.00	$ 262,080.00
3.4.2	*Steel Walers, W36x260, Two levels of walers, furnish, install, salvage 312 LF*	81,120	LBS	$ 1.50	$ 121,680.00
3.4.3	*Interior Struts, Two levels, Pipe 18 std*	16,380	LBS	$ 1.50	$ 24,570.00
3.4.4	*Column support, Pipe 12 std*	1,141	LBS	$ 1.50	$ 1,711.00
3.4.5	*Excavate, Haul & Dispose (36'x42'x30' deep)*	1,680	CY	$ 50.00	$ 84,000.00
3.4.6	*De-Watering*	120	DAY	$ 250.00	$ 30,000.00
3.4.7	*Crushed Stone Sub-base(36'x42'x3' thick)*	168	CY	$ 35.00	$ 5,880.00
3.4.8	*Tremied Working Slab/Bottom Strut, 2 ft. thick*	112	CY	$ 125.00	$ 14,000.00
3.4.9	*Reinforced Concrete Base Slab, 2 ft. thick, 30'x36'*	80	CY	$ 200.00	$ 16,000.00
3.4.10	*Reinforced Concrete Walls, 2 ft. thick*	207	CY	$ 990.00	$ 204,930.00
3.4.11	*Integral Pilasters, Heavily Reinforced, 2'x2'x25' H @ corners & @mid span*	30	CY	$ 1,000.00	$ 30,000.00
3.4.12	*Pump Intake Bay 18" Divider Walls to mid-height*	22	CY	$ 500.00	$ 11,000.00
3.4.13	*Concrete Roof (assume 15 inches thick with integral support beams 2'w x 2'deep @ mid-points)*	47	CY	$ 2,000.00	$ 94,000.00
3.4.14	*Miscellaneous Steel Embedments*	2,500	LBS	$ 5.00	$ 12,500.00
3.4.15	*Select Granular Backfill, Well Compacted*	663	CY	$ 35.00	$ 23,205.00
3.4.16	*Zinc-plated Pump Access Hatches*	3	EA	$ 7,500.00	$ 22,500.00
3.5	*24" PL 7040/844 40HP Flygt Axial Flow Pump with a 397mm 20° SS impeller, 460V 3PH motor, FLS Leakage Detector*	3	EA	$ 66,166.67	$ 198,500.00
3.6	*Landscaping/ Signage*	1	LS	$ 20,000.00	$ 20,000.00
3.7	*Discharge Pipes*				
3.7.1	*30" Steel Pipes*	283	LF	$ 700.00	$ 198,100.00
3.7.2	*42" Steel Pipes*	30	LF	$ 900.00	$ 27,000.00
3.7.3	*In-Line Check Valves and Trash Racks*	3	EA	$ 25,000.00	$ 75,000.00
3.8	*Commissioning*	1	LS	$ 25,000.00	$ 25,000.00
3.90	*Backfill*	1,500	CY	$ 15.00	$ 22,500.00

City of Annapolis
Stormwater and Flood Mitigation Engineering Design Services
Construction Cost Estimate
Concept Submittal
May 2, 2017

Item	Description	Quantity	Unit	Unit Price	Total
4.0	**South Pump Station**				
4.1	*Mechanical/Electrical System*				
4.1.1	*Electrical Control Panels*	1	EA	$ 216,296.00	$ 216,296.00
4.1.2	*Electrical Ductbanks*	1	EA	$ 12,000.00	$ 12,000.00
4.2	*Aboveground Control Structure with Standby Generator Enclosure (building shell only - excludes MEP and Site Work)*	768	SF	$ 250.00	$ 192,000.00
4.3	*Generators*	1	EA	$ 89,660.00	$ 89,660.00
4.4	*Wet Well*				
4.4.1	*Structural Shoring, Steel Sheet Piling, PZ-27, Furnish Install and Abandon In Place (40'x50' perimeter, 60' long sheets)*	10,800	SF	$ 28.00	$ 302,400.00
4.4.2	*Steel Walers, W36x300, Two levels of walers, furnish, install, salvage 312 LF*	108,000	LBS	$ 1.50	$ 162,000.00
4.4.3	*Interior Struts, Two levels, Pipe 18 std*	18,900	LBS	$ 1.50	$ 28,350.00
4.4.4	*Column support, Pipe 12 std*	1,141	LBS	$ 1.50	$ 1,711.00
4.4.5	*Excavate, Haul & Dispose (40'x50'x30'deep)*	2,222	CY	$ 50.00	$ 111,100.00
4.4.6	*De-Watering*	120	DAY	$ 275.00	$ 33,000.00
4.4.7	*Crushed Stone Sub-base(40'x50'x3' thick)*	222	CY	$ 35.00	$ 7,770.00
4.4.8	*Tremied Working Slab/Bottom Strut, 40'x50'x2 ft. thick*	148	CY	$ 125.00	$ 18,500.00
4.4.9	*Reinforced Concrete Base Slab, 2 ft. thick, 34'x44'*	111	CY	$ 200.00	$ 22,200.00
4.4.10	*Reinforced Concrete Walls, 2 ft. thick*	244	CY	$ 990.00	$ 241,560.00
4.4.11	*Integral Pilasters, 2'x2'x25' H @ corners @mid span*	30	CY	$ 1,000.00	$ 30,000.00
4.4.12	*Pump Intake Bay 18" Divider Walls to mid-height*	22	CY	$ 500.00	$ 11,000.00
4.4.13	*Concrete Roof (assume 12 inches thick with integral support beams 2'w x 2'deep @ mid-points)*	52	CY	$ 1,000.00	$ 52,000.00
4.4.14	*Miscellaneous Steel Embedments*	2,500	LBS	$ 5.00	$ 12,500.00
4.4.15	*Select Granular Backfill, Well Compacted*	815	CY	$ 35.00	$ 28,525.00
4.4.16	*Zinc-plated Pump Access Hatches*	3	EA	$ 7,500.00	$ 22,500.00
4.5	*24" PL 7040/644 80HP Flygt Axial Flow Pump with a 397mm 20° SS impeller, 460V 3PH motor, FLS Leakage Detector*	3	EA	$ 68,833.33	$ 206,500.00
4.6	*Landscaping/ Signage*	1	LS	$ 20,000.00	$ 20,000.00
4.7	*Discharge Pipes*				
4.7.1	*36" Steel Pipes*	1,086	LF	$ 800.00	$ 868,800.00
4.7.2	*48" Steel Pipes*	30	LF	$ 1,000.00	$ 30,000.00
4.7.3	*In-Line Check Valves and Trash Racks*	3	EA	$ 25,000.00	$ 75,000.00
4.8	*Access Driveway*	40	SY	$ 60.00	$ 2,400.00
4.9	*Re-Construct Playground/ Basketball Court*	1	LS	$ 15,000.00	$ 15,000.00
4.10	*Commissioning*	1	LS	$ 25,000.00	$ 25,000.00
4.11	*Backfill*	2,000	CY	$ 15.00	$ 30,000.00
5.0	**Storm Drain Realignment**				
5.1	*Bituminous Pavement*				
5.1.1	*2" of 9.5mm Superpave Mix (Hot Mix Asphalt)*	6,330	SY	$ 12.00	$ 75,960.00
5.1.2	*4" of 19mm Superpave Mix (Hot Mix Asphalt)*	6,330	SY	$ 22.00	$ 139,260.00
5.1.3	*12" Base Course Graded Aggregate Base*	6,330	SY	$ 15.00	$ 94,950.00
5.2	*New Storm Drain Collection System*				
5.2.1	*Manholes*	11	EA	$ 6,000.00	$ 66,000.00
5.2.2	*Junction Manholes*	8	EA	$ 6,000.00	$ 48,000.00
5.2.3	*Grate Inlet*	33	EA	$ 3,000.00	$ 99,000.00
5.2.4	*Curb Inlet*	13	EA	$ 3,000.00	$ 39,000.00
5.2.5	*Combination Inlet*	8	EA	$ 3,000.00	$ 24,000.00
5.2.6	*5" RCP*	63	LF	$ 50.00	$ 3,150.00
5.2.7	*9" RCP*	495	LF	$ 60.00	$ 29,700.00
5.2.8	*12" RCP Class IV*	769	LF	$ 55.00	$ 42,295.00
5.2.9	*15" RCP Class IV*	771	LF	$ 58.00	$ 44,718.00
5.2.10	*18" RCP Class IV*	265	LF	$ 63.00	$ 16,695.00
5.2.11	*21" RCP Class IV*	222	LF	$ 68.00	$ 15,096.00
5.2.12	*24" RCP Class IV*	746	LF	$ 72.00	$ 53,712.00
5.2.13	*27" RCP Class IV*	319	LF	$ 95.00	$ 30,305.00
5.2.14	*30" RCP Class IV*	29	LF	$ 130.00	$ 3,770.00
5.2.15	*36" RCP Class IV*	411	LF	$ 178.00	$ 73,158.00
5.2.16	*42" RCP Class IV*	176	LF	$ 245.00	$ 43,120.00
5.3	*Watertight By-pass System*				
5.3.1	*CIPP Storm Drain Lining 24"*	31	LF	$ 180.00	$ 5,580.00
5.3.2	*CIPP Storm Drain Lining 30"*	253	LF	$ 200.00	$ 50,600.00
5.3.3	*CIPP Storm Drain Lining 36"*	171	LF	$ 220.00	$ 37,620.00
5.3.4	*Grated/Locking Frame and Cover*	10	EA	$ 1,200.00	$ 12,000.00
5.3.5	*In-Line Check Valves and Trash Racks*	2	EA	$ 25,000.00	$ 50,000.00

Item	Description	Quantity	Unit	Unit Price	Total
6.0	**Grading Modifications**				
6.1	*Bulkhead Extension*	90	LF	$ 300.00	$ 27,000.00
6.2	*Brick Plaza*	820	SF	$ 25.00	$ 20,500.00
7.0	**Erosion and Sediment Control**				
7.1	*Erosion and Sediment Control* (3)	1	LS	$ 30,000.00	$ 30,000.00
Subtotal (Labor and Materials)					**$ 6,984,497.00**
	Prevailing Wage Rate Premium (5.5 %)				$ 384,147.00
	Overhead & Profit (10%)				$ 698,450.00
	Performance Bond (2%)				$ 139,690.00
	Escalation to Mid-Point of Construction (2.5% per annum)				$ 174,612.00
Subtotal (Labor, Materials, and Mark-up)					**$ 8,381,396.00**
	Construction Administration and Construction Management (4)				$ 838,140.00
	Contingency (5)				$ 1,396,899.00
Total					**$ 10,616,435.00**

Notes and Assumptions:

Unit prices are primarily based on State Highway Administration Price Index effective July 2016, Maryland Department of Transportation.

(1) Mobilization / Demobilization/General Conditions is assumed to include the transport, staging, delivery, assembly and set-up of all equipment, tools, storage facilities, fuel and oil, office trailers, etc. required to perform the work, and the subsequent demobilization of same. It also includes labor costs for on-site project manager, project engineer and quality assurance and traffic control. This is estimated at approximately 10% of the project subtotal.

(2) Cost for Site Survey Control assumes that a Survey Crew will be required only during construction of the pump station control buildings, project stake-out, and for surveying of all project milestones included in the Construction Quality Assurance (CQA) Plan. Duration of project is assumed to be 15 months.

(3) Erosion and Sediment cost is an estimate based on the size of the project area, potential limits of disturbance, and diversion methods utilized during construction.

(4) Costs for Construction Administration and Construction Management are estimated at approximately 10% of the project subtotal. Fee does not include design and engineering during construction.

(5) The contingency is to account for unforeseen and unknown items that may be encountered during the construction of the project and variations in contractor unit prices resulting from competitive bidding. Due to the level of detail contained in this cost estimate, contingency are estimated at approximately 20% of the project subtotal including the costs for construction administration and construction management costs.

(6) Estimate does not include permit fees, BGE service fees, Electrical Testing, Startup or Commissioning, Security, Telephone or Fire Protection, SCADA Interface with the City of Annapolis systems, or Lightning Protection System.

(7) Cost estimate does not include fee for engineering design, field survey, geotechnical evaluation, or permitting.

AECOM

Maintenance Schedule and Lifecycle Costs

AECOM

City of Annapolis
Stormwater and Flood Mitigation Engineering Design Services
Concept Design
Operation and Maintenance Cost Estimate (In Present Value)
May 2, 2017

ACTIVITY	COMMENTS	YEAR 0	YEAR 1	YEAR 2	YEAR 3	YEAR 4	YEAR 5	YEAR 6	YEAR 7	YEAR 8	YEAR 9	YEAR 10	YEAR 11	YEAR 12	YEAR 13	YEAR 14
Baseline Condition Assessment of Pump Stations & Reports	Using contractors equipment for access. If done separately cost will be higher.	$17,500														
Development of O&M Manuals	Compilation of equipment manuals. Includes operating procedures for pumps. Detailed O&M schedule and O&M performance record forms.	$40,000														
Periodic Structural Assessments of Wet Wells	Confined space entry cost driver.						$25,000					$25,000				
Inspect Internal Check Valves - Discharge Pipes	Requires a diver, but critical component that must be checked annually.	$5,000	$5,000	$5,000	$5,000	$5,000	$5,000	$5,000	$5,000	$5,000	$5,000	$5,000	$5,000	$5,000	$5,000	$5,000
Inspect Sites & Control Bldgs - Paving, Fencing, Gates, Signage, Exterior Condition, Doors, Roof, Basic Check of Electrical Equipment	General inspection, requires no particular expertise, but needs to be done monthly.	$2,000	$2,000	$2,000	$2,000	$2,000	$2,000	$2,000	$2,000	$2,000	$2,000	$2,000	$2,000	$2,000	$2,000	$2,000
Inspect Wet Well Components: Influent & Effluent Pipe Penetrations, Level Sensors, Power Cables, Instrument Connections, Hatches, etc.	Coordinate with Structural assessment of wet wells. Confined space entry drives cost.						$15,000					$15,000				
Inspect Pipeline Corridors: Walk-through visual inspection for leaks, grade subsidence, pavement deterioration, and other signs of pipe failure.	General inspection, requires no particular expertise, but needs to be done semi-annually.	$1,500	$1,500	$1,500	$1,500	$1,500	$1,500	$1,500	$1,500	$1,500	$1,500	$1,500	$1,500	$1,500	$1,500	$1,500
Energy costs based on 200 Hr/year Operation+ controls and accessories	For the two stations (6 Pumps)		$4,000	$4,100	$4,203	$4,308	$4,415	$4,526	$4,639	$4,755	$4,874	$4,995	$5,120	$5,248	$5,380	$5,514
Maintenance costs (Routine + Periodic)	For the two stations (6 Pumps)		$500	$1,035	$1,585	$2,144	$2,709	$3,281	$3,858	$4,438	$5,023	$5,610	$6,201	$6,794	$7,389	$7,987
Annual Mechanical Equipment functional Inspections	For the two stations (6 Pumps)		$3,500	$3,500	$3,500	$3,500	$3,500	$3,500	$3,500	$3,500	$3,500	$3,500	$3,500	$3,500	$3,500	$3,500
Mechanical Equipment Replacement and Installation at 25 Yrs	Replace 6 Pumps (Electrical not Included)															
SUM		**$66,000**	**$16,500**	**$17,135**	**$17,787**	**$18,451**	**$59,125**	**$19,807**	**$20,496**	**$21,193**	**$21,896**	**$62,606**	**$23,321**	**$24,042**	**$24,769**	**$25,501**

AECOM

City of Annapolis
Stormwater and Flood Mitigation Engineering Design Services
Concept Design
Operation and Maintenance Cost Estimate (In Present Value)
May 2, 2017

ACTIVITY	COMMENTS	YEAR 15	YEAR 16	YEAR 17	YEAR 18	YEAR 19	YEAR 20	YEAR 21	YEAR 22	YEAR 23	YEAR 24	YEAR 25	YEAR 26	YEAR 27	YEAR 28	YEAR 29
Baseline Condition Assessment of Pump Stations & Reports	Using contractors equipment for access. If done separately cost will be higher.															
Development of O&M Manuals	Compilation of equipment manuals. Includes operating procedures for pumps. Detailed O&M schedule and O&M performance record forms.															
Periodic Structural Assessments of Wet Wells	Confined space entry cost driver.	$25,000					$25,000					$25,000				
Inspect Internal Check Valves - Discharge Pipes	Requires a diver, but critical component that must be checked annually.	$5,000	$5,000	$5,000	$5,000	$5,000	$5,000	$5,000	$5,000	$5,000	$5,000	$5,000	$5,000	$5,000	$5,000	$5,000
Inspect Sites & Control Bldgs - Paving, Fencing, Gates, Signage, Exterior Condition, Doors, Roof, Basic Check of Electrical Equipment	General inspection, requires no particular expertise, but needs to be done monthly.	$2,000	$2,000	$2,000	$2,000	$2,000	$2,000	$2,000	$2,000	$2,000	$2,000	$2,000	$2,000	$2,000	$2,000	$2,000
Inspect Wet Well Components: Influent & Effluent Pipe Penetrations, Level Sensors, Power Cables, Instrument Connections, Hatches, etc.	Coordinate with Structural assessment of wet wells. Confined space entry drives cost.	$15,000					$15,000					$15,000				
Inspect Pipeline Corridors: Walk-through visual inspection for leaks, grade subsidence, pavement deterioration, and other signs of pipe failure.	General inspection, requires no particular expertise, but needs to be done semi-annually.	$1,500	$1,500	$1,500	$1,500	$1,500	$1,500	$1,500	$1,500	$1,500	$1,500	$1,500	$1,500	$1,500	$1,500	$1,500
Energy costs based on 200 Hr/year Operation+ controls and accessories	For the two stations (6 Pumps)	$5,652	$5,793	$5,938	$6,086	$6,239	$6,395	$6,554	$6,718	$6,886	$7,058	$7,235	$7,416	$7,601	$7,791	$7,986
Maintenance costs (Routine + Periodic)	For the two stations (6 Pumps)	$8,587	$9,190	$9,794	$10,399	$11,007	$11,616	$12,226	$12,838	$13,452	$14,067	$14,683	$0	$500	$1,035	$1,585
Annual Mechanical Equipment functional Inspections	For the two stations (6 Pumps)	$3,500	$3,500	$3,500	$3,500	$3,500	$3,500	$3,500	$3,500	$3,500	$3,500	$3,500	$3,500	$3,500	$3,500	$3,500
Mechanical Equipment Replacement and Installation at 25 Yrs	Replace 6 Pumps (Electrical not Included)												$486,000			
SUM		**$66,239**	**$26,983**	**$27,732**	**$28,486**	**$29,245**	**$70,010**	**$30,781**	**$31,557**	**$32,338**	**$33,125**	**$73,918**	**$505,416**	**$20,101**	**$20,826**	**$21,571**

AECOM

City of Annapolis
Stormwater and Flood Mitigation Engineering Design Services
Concept Design
Operation and Maintenance Cost Estimate (In Present Value)
May 2, 2017

ACTIVITY	COMMENTS	YEAR 30	YEAR 31	YEAR 32	YEAR 33	YEAR 34	YEAR 35	YEAR 36	YEAR 37	YEAR 38	YEAR 39	YEAR 40	YEAR 41	YEAR 42	YEAR 43	YEAR 44
Baseline Condition Assessment of Pump Stations & Reports	Using contractors equipment for access. If done separately cost will be higher.															
Development of O&M Manuals	Compilation of equipment manuals. Includes operating procedures for pumps. Detailed O&M schedule and O&M performance record forms.															
Periodic Structural Assessments of Wet Wells	Confined space entry cost driver.	$25,000					$25,000					$25,000				
Inspect Internal Check Valves - Discharge Pipes	Requires a diver, but critical component that must be checked annually.	$5,000	$5,000	$5,000	$5,000	$5,000	$5,000	$5,000	$5,000	$5,000	$5,000	$5,000	$5,000	$5,000	$5,000	$5,000
Inspect Sites & Control Bldgs - Paving, Fencing, Gates, Signage, Exterior Condition, Doors, Roof, Basic Check of Electrical Equipment	General inspection, requires no particular expertise, but needs to be done monthly.	$2,000	$2,000	$2,000	$2,000	$2,000	$2,000	$2,000	$2,000	$2,000	$2,000	$2,000	$2,000	$2,000	$2,000	$2,000
Inspect Wet Well Components: Influent & Effluent Pipe Penetrations, Level Sensors, Power Cables, Instrument Connections, Hatches, etc.	Coordinate with Structural assessment of wet wells. Confined space entry drives cost.	$15,000					$15,000					$15,000				
Inspect Pipeline Corridors: Walk-through visual inspection for leaks, grade subsidence, pavement deterioration, and other signs of pipe failure.	General inspection, requires no particular expertise, but needs to be done semi-annually.	$1,500	$1,500	$1,500	$1,500	$1,500	$1,500	$1,500	$1,500	$1,500	$1,500	$1,500	$1,500	$1,500	$1,500	$1,500
Energy costs based on 200 Hr/year Operation+ controls and accessories	For the two stations (6 Pumps)	$8,186	$8,390	$8,600	$8,815	$9,035	$9,261	$9,493	$9,730	$9,973	$10,223	$10,478	$10,740	$11,009	$11,284	$11,566
Maintenance costs (Routine + Periodic)	For the two stations (6 Pumps)	$2,144	$2,709	$3,281	$3,858	$4,438	$5,023	$5,610	$6,201	$6,794	$7,389	$7,987	$8,587	$9,190	$9,794	$10,399
Annual Mechanical Equipment functional Inspections	For the two stations (6 Pumps)	$3,500	$3,500	$3,500	$3,500	$3,500	$3,500	$3,500	$3,500	$3,500	$3,500	$3,500	$3,500	$3,500	$3,500	$3,500
Mechanical Equipment Replacement and Installation at 25 Yrs	Replace 6 Pumps (Electrical not Included)															
SUM		**$62,329**	**$23,100**	**$23,881**	**$24,673**	**$25,474**	**$66,284**	**$27,103**	**$27,931**	**$28,767**	**$29,612**	**$70,466**	**$31,328**	**$32,198**	**$33,078**	**$33,965**

AECOM

City of Annapolis
Stormwater and Flood Mitigation Engineering Design Services
Concept Design
Operation and Maintenance Cost Estimate (In Present Value)
May 2, 2017

ACTIVITY	COMMENTS	YEAR 45	YEAR 46	YEAR 47	YEAR 48	YEAR 49	YEAR 50
Baseline Condition Assessment of Pump Stations & Reports	Using contractors equipment for access. If done separately cost will be higher.						
Development of O&M Manuals	Compilation of equipment manuals. Includes operating procedures for pumps. Detailed O&M schedule and O&M performance record forms.						
Periodic Structural Assessments of Wet Wells	Confined space entry cost driver.	$25,000					$25,000
Inspect Internal Check Valves - Discharge Pipes	Requires a diver, but critical component that must be checked annually.	$5,000	$5,000	$5,000	$5,000	$5,000	$5,000
Inspect Sites & Control Bldgs - Paving, Fencing, Gates, Signage, Exterior Condition, Doors, Roof, Basic Check of Electrical Equipment	General inspection, requires no particular expertise, but needs to be done monthly.	$2,000	$2,000	$2,000	$2,000	$2,000	$2,000
Inspect Wet Well Components: Influent & Effluent Pipe Penetrations, Level Sensors, Power Cables, Instrument Connections, Hatches, etc.	Coordinate with Structural assessment of wet wells. Confined space entry drives cost.	$15,000					$15,000
Inspect Pipeline Corridors: Walk-through visual inspection for leaks, grade subsidence, pavement deterioration, and other signs of pipe failure.	General inspection, requires no particular expertise, but needs to be done semi-annually.	$1,500	$1,500	$1,500	$1,500	$1,500	$1,500
Energy costs based on 200 Hr/year Operation+ controls and accessories	For the two stations (6 Pumps)	$11,855	$12,152	$12,455	$12,767	$13,086	$13,413
Maintenance costs (Routine + Periodic)	For the two stations (6 Pumps)	$11,007	$11,616	$12,226	$12,838	$13,452	$14,067
Annual Mechanical Equipment functional Inspections	For the two stations (6 Pumps)	$3,500	$3,500	$3,500	$3,500	$3,500	$3,500
Mechanical Equipment Replacement and Installation at 25 Yrs	Replace 6 Pumps (Electrical not Included)						
SUM		**$74,862**	**$35,767**	**$36,682**	**$37,605**	**$38,538**	**$79,480**