FILE NAME: P:\Proj130\130003.01 Aris T. Allen Property\10_Dwgs\CADD\Working\L2.0-L2.3 LANDSCAPE DETAILS_recover.dwg PLOT TIME: Mon, 02 Jun 2014 - 5:09pm LAST SAVE: Mon, 28 Apr 2014 - 4:37pm BY: ltorres

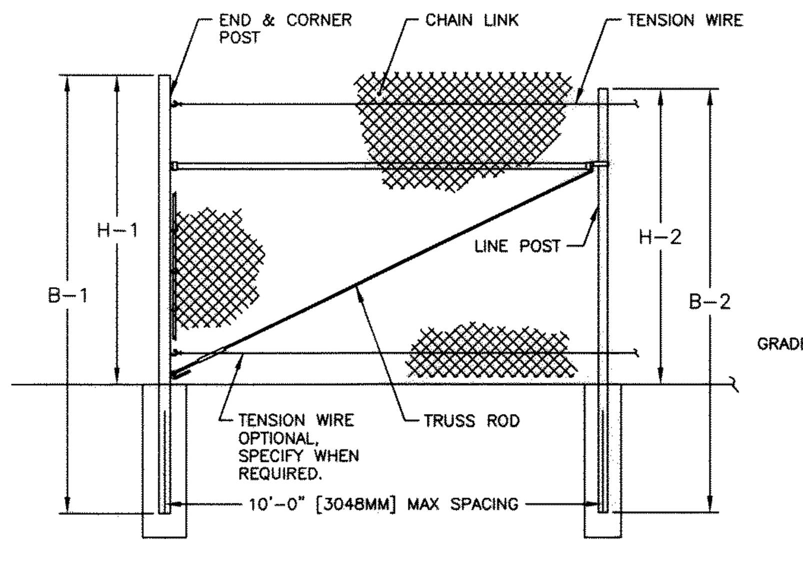

FENCE SECTION ELEVATION
WITHOUT TOP RAIL & WITHOUT BARBED WIRE

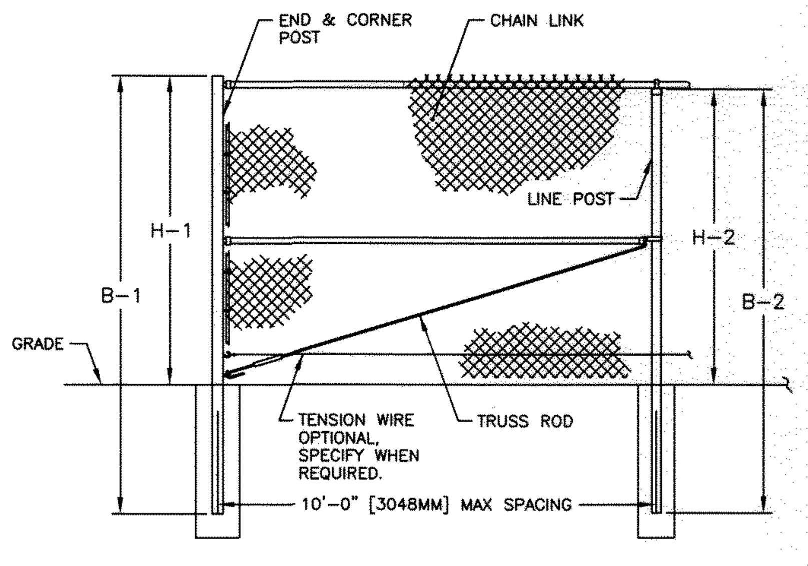

FENCE SECTION ELEVATION
WITH TOP RAIL & WITHOUT BARBED WIRE

FENCE HEIGHT	END & CORNER POSTS		LINE POSTS	
NOMINAL HEIGHT	B-1 BAR LENGTH	H-1 HEIGHT ABOVE GRADE	B-2 BAR LENGTH	H-2 HEIGHT ABOVE GRADE
5'-0" [1524MM]	8'-0" [2438MM]	5'-0 5/8" [1540MM]	7'-8" [2337MM]	4'-8 7/8" [1445MM]
6'-0" [1829MM]	9'-0" [2743MM]	6'-0 5/8" [1845MM]	8'-8" [2642MM]	5'-8 7/8" [1749MM]
7'-0" [2134MM]	10'-0" [3048MM]	7'-0 5/8" [2150MM]	9'-8" [2946MM]	6'-8 7/8" [2054MM]
8'-0" [2438MM]	11'-0" [3353MM]	8'-0 5/8" [2454MM]	10'-8" [3251MM]	7'-8 7/8" [2359MM]
9'-0" [2743MM]	12'-0" [3658MM]	9'-0 5/8" [2759MM]	11'-8" [3556MM]	8'-8 7/8" [2664MM]
10'-0" [3048MM]	13'-0" [3962MM]	10'-0 5/8" [3064MM]	12'-8" [3861MM]	9'-8 7/8" [2969MM]
11'-0" [3353MM]	14'-0" [4267MM]	11'-0 5/8" [3369MM]	13'-8" [4166MM]	10'-8 7/8" [3273MM]
12'-0" [3658MM]	15'-0" [4572MM]	12'-0 5/8" [3674MM]	14'-8" [4470MM]	11'-8 7/8" [3578MM]

NOTES:
1. THIS DWG CORRESPONDS WITH DWGS 1-1110 & 1-1130.
2. SPECIFICATIONS SHOWN CAN BE CHANGED BY MASTER HALCO ONLY.

MASTER HALCO®	ANCHOR FENCE PRODUCTS by Master Halco, Orange, CA, Phone No.: 800-229-5615, www.FenceOnline.com	TYPICAL HIGH FENCE WITHOUT BARBED WIRED	BY: JRR	DWG: 1-1000
			DATE: 09-27-95	
		DIMENSIONS & SPECIFICATIONS	REV: C	LAYER: 1
			REV DATE: 08-04-06	SCALE: 1/4" = 1'-0"

COPYRIGHT © 2001-2006 MASTER HALCO, INC. ALL RIGHTS RESERVED.

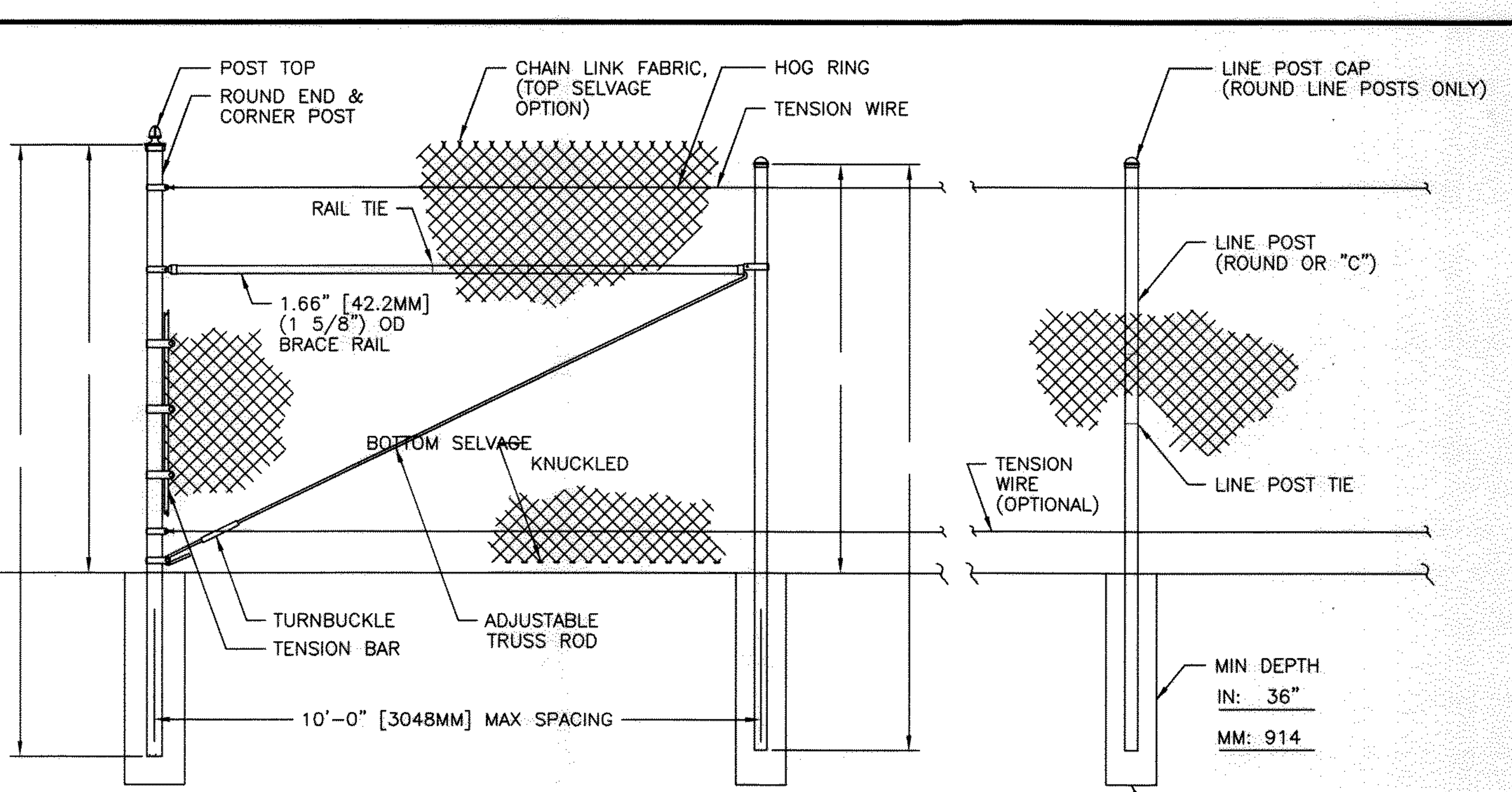

END & CORNER POST TOP OPTIONS		TOP & BOTTOM FABRIC OPTIONS	
STANDARD	DOME	TWIST	KNUCKLE

FENCE SECTION ELEVATION – ROUND END POSTS
SEE DWGS 1-1000 & 1-1006 FOR DIMS & DETAILS

NOTES:
1. METRIC DIMENSIONS ARE NOMINAL EQUIVALENTS TO U.S. DIMENSIONS.
2. SPECIFICATIONS SHOWN CAN BE CHANGED BY MASTER HALCO ONLY.
3. FOOTING WIDTH TO BE (4)X POST WIDTH.

MASTER HALCO®	ANCHOR FENCE PRODUCTS by Master Halco, Orange, CA, Phone No.: 800-229-5615, www.FenceOnline.com	TYPICAL HIGH FENCE	BY: JRR	DWG: 1-1110
			DATE: 09-25-95	
		ROUND END POSTS, WITHOUT TOP RAIL & WITHOUT BARBED WIRE	REV: C	LAYER: 1
			REV DATE: 08-25-06	SCALE: 3/8" = 1'-0"

COPYRIGHT © 2001-2006 MASTER HALCO, INC. ALL RIGHTS RESERVED.

ROOT PROTECTION DETAIL

NOT TO SCALE

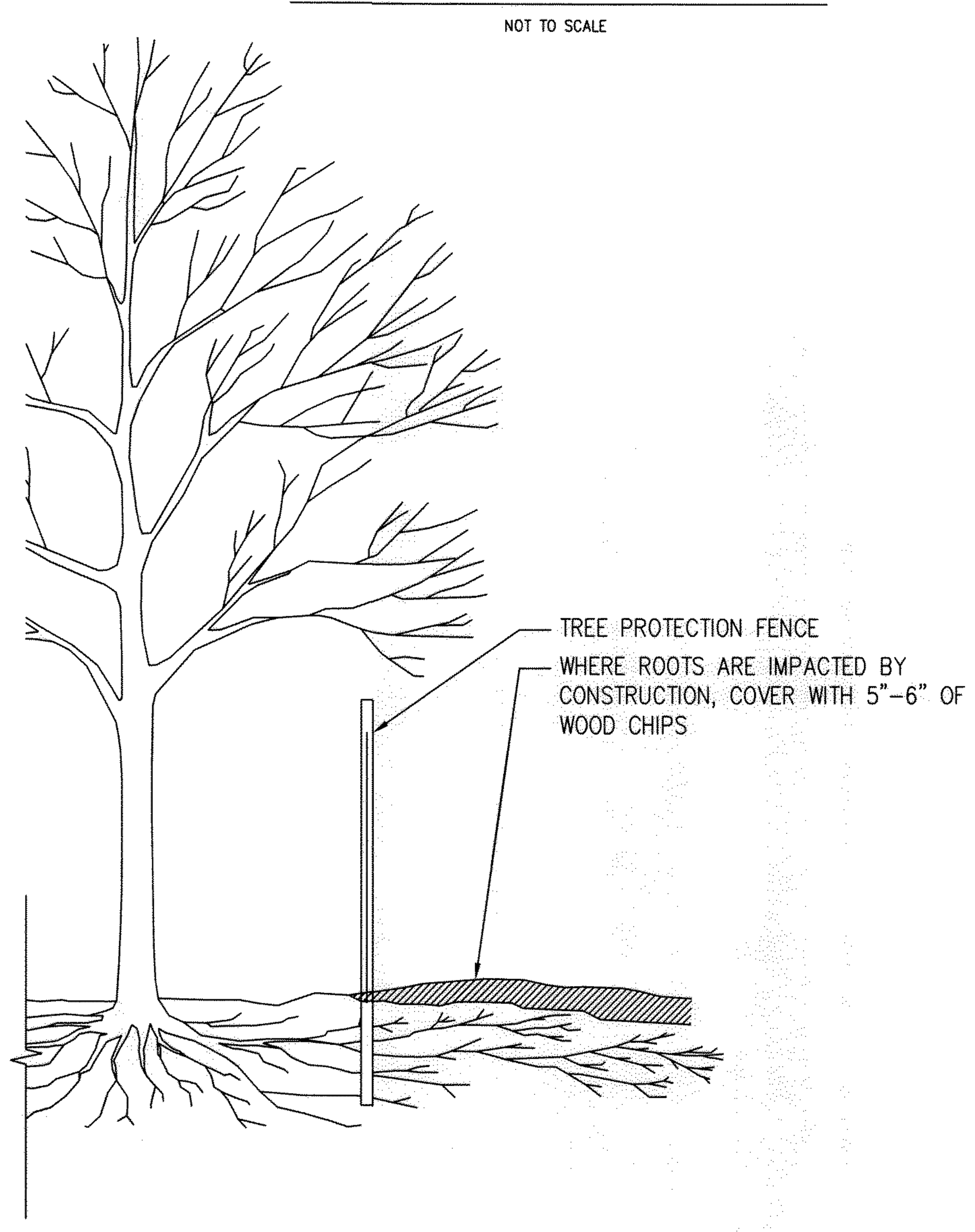

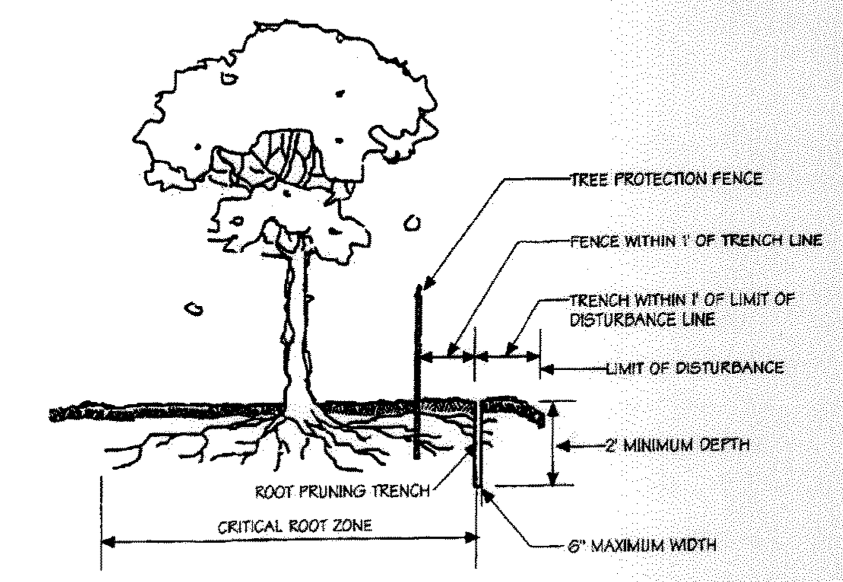

Notes:
1. Retention Areas to be established as part of the forest conservation plan review process.
2. Boundaries of Retention Areas to be staked, flagged and/or fenced prior to trenching.
3. Exact location of trench should be identified.
4. Trench should be immediately backfilled with soil removed or organic soil.
5. Roots should be cleanly cut using vibratory knife or other acceptable equipment.

Source: Adapted from Steve Clark & Associates/ACRT, Inc. and Forest Conservation Manual, 1991

Root Pruning	Figure D-1

D - 2

ROOT PRUNING

NTS

Linear Application of DeepRoot Tree Root Barriers at Time of Installing Concrete Sidewalks and Curbs

TYPICAL SECTION OF CURB AND GUTTER WITH DEEPROOT TREE ROOT BARRIER INSET INTO CONCRETE.
BARRIER INSTALLED IN A TRENCH IN SUBGRADE WHICH IS THEN COMPACTED. BARRIER IS SET SO THAT TOP EDGE WILL BE 2" (5CM) BELOW FINISH GRADE OF CURB, AND SET FLUSH WITH EDGE OF CURB. BARRIER RIBS FACE TOWARD TREE ROOTS.

INSTALLATION SEQUENCE:

1. Prepare base and subgrade
2. Trench to appropriate depth for installation of root barrier so that top of barrier is 2" (5cm) below finish grade of top of curb.
3. Place root barrier in trench, vertical ribs must face toward tree roots.
4. Backfill and compact to requirements.
5. Place form material against barrier (It may be nailed from the outside of the form)

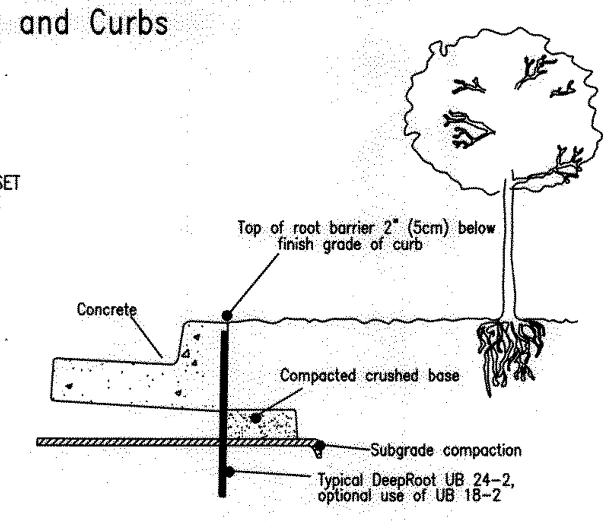

TYPICAL SECTION OF CURB, GUTTER AND SIDEWALK WITH DEEPROOT TREE ROOT BARRIER INSET INTO CONCRETE

BARRIER INSTALLED IN A TRENCH IN SUBGRADE WHICH IS THEN COMPACTED. BARRIER IS SET SO THAT TOP EDGE WILL BE 2" (5CM) ABOVE COMPACTED BASE (or halfway between base and finish grade of SW). BARRIER RIBS FACE TOWARD TREE ROOTS.

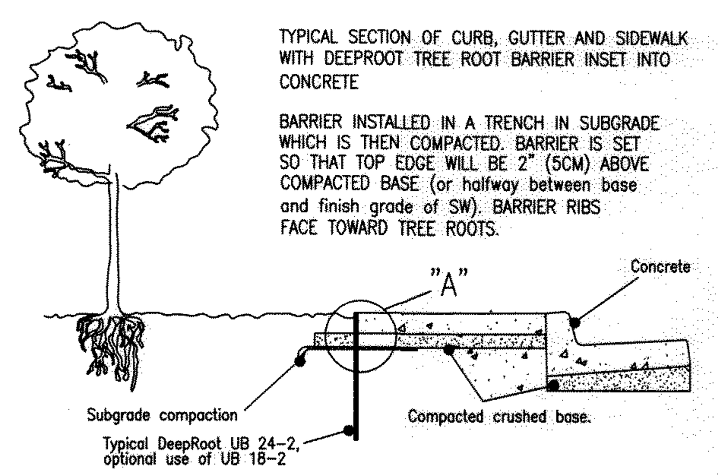

INSTALLATION SEQUENCE:

1. Prepare base and subgrade
2. Trench to appropriate depth for installation of root barrier so that top of barrier is 2" (5cm) below finish grade of top of sidewalk (or halfway between top of compacted base and finish grade of SW)
3. Place root barrier in trench, vertical ribs must face toward tree roots.
4. Backfill and compact to requirements.
5. Place form material against barrier (It may be nailed from the outside of the form)

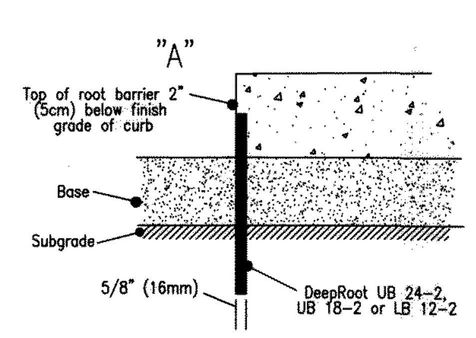

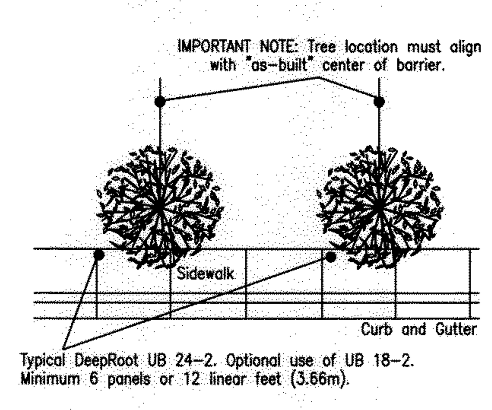

UB 18-2 Specifications
18" DeepRoot® Tree Root Barrier

Specified tree root barrier is a mechanical barrier and root deflector used to prevent tree roots from damaging hardscapes and landscapes. Assembled in 24" (609 mm) long modules to create varying lengths for linear applications, or perimeter surround applications in varying sizes.

A. Materials
1. The contractor shall furnish and install tree root barrier as specified. The tree root barrier shall be either product #UB 18-2 as manufactured by DeepRoot® Green Infrastructure, LLC, 530 Washington Street, San Francisco, CA, www.deeproot.com (800.458.7668).

2. Root barrier shall be recyclable, black, injection molded panels with 0.75" (1.90 mm) wall thickness in modules 24" (609 mm) long and 18" (460 mm) deep.

3. Root barrier shall be manufactured with 75% reprocessed polypropylene with added ultraviolet inhibitors.

4. Root barrier shall be comprised of 24" (609 mm) panels. Each panel shall have no less than four (4) Molded Integral Vertical Root Directing Ribs of a minimum 0.060" (1.52 mm) thickness, protruding 1/2" (12.7 mm) at 90° from interior of the barrier panel, spaced 6" (152.4 mm) apart. (See Details A & D)

5. Root barrier shall have a Double Top Edge consisting of two parallel, integral, horizontal ribs at the top of the panel at 0.060" (1.52 mm) thickness, 3/8" (9.53 mm) wide and 1/4" (6.35 mm) apart with the lower rib attached to the vertical Root Directing Ribs (See Detail A).

6. Root barrier shall have a minimum of nine (9) Anti-Lift Ground Lock Tabs consisting of integral horizontal ridges of minimum 0.060" (1.52 mm) thickness in the shape of a segment of a circle, the 2-1/4" (57.15 mm) chord of the segment joining the panel wall and the segment, protruding 3/8" (9.53 mm) from the panel. The ground locks on each panel shall be about equally spaced between each of the vertical root directing ribs (See Details B & D).

7. Root barrier shall have an integrated Zipper Joining System for assembly by sliding one panel into another (See Detail C).

U.S. Patents: 5,305,549; and 5,528,857. Other Patents Pending.

Properties	Typical Value	ASTM Test Method
Tensile strength @ yield - Wall	2.354 PSI	D638
Tensile strength @ yield - Hinge	2.846 PSI	D638
Yield Elongation - Wall	7.44%	D638
Yield Elongation - Hinge	7.01%	D638
Flexural Modulus	119.625 PSI	D790B
Notched Izod Impact - Wall	3.84 (ft-lbs)	D256A
Rockwell Hardness r. scale - Wall	84.4	D785A

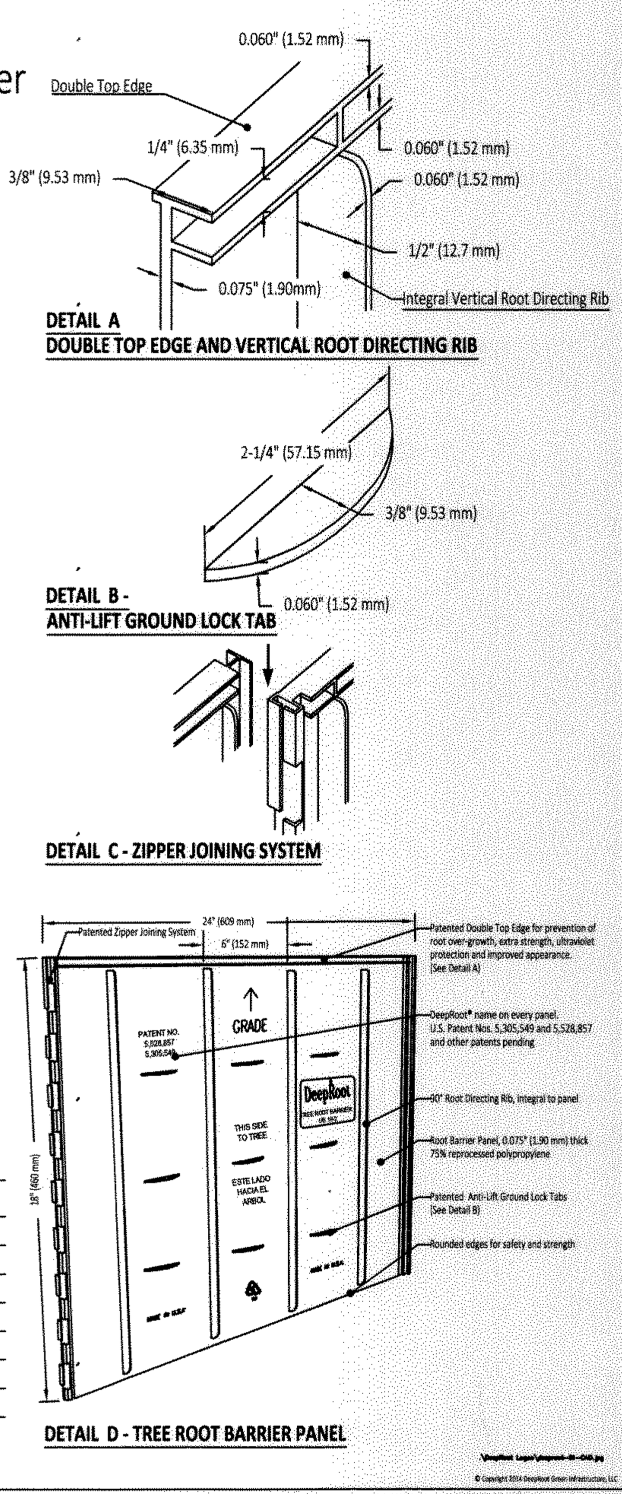

THESE PLANS ARE BASED UPON PLANS TITLED 'ARIS ALLEN BOULEVARD, LLC MIXED RESIDENTIAL' CREATED BY BOWMAN CONSULTING, PORTIONS OF WHICH ARE USED HEREIN.

COPYRIGHT © 2014, McLAREN ENGINEERING GROUP

NO.	DATE	REVISION	BY

McLaren ENGINEERING GROUP
applied ingenuity
McLaren Technical Services, Inc.
601 East Pratt Street, Suite 302 Baltimore, Maryland 21202
T. (410) 243-8787 F. (410) 243-4956 www.mgmclaren.com

PROJECT
ARIS T. ALLEN BOULEVARD
RESIDENTIAL PLANNED DEVELOPMENT
PART 1 - LOTS 26 - 31, 47 & 48
TAX MAP/GRID: 51E/8 6TH ELECTION DISTRICT
CITY OF ANNAPOLIS, MARYLAND

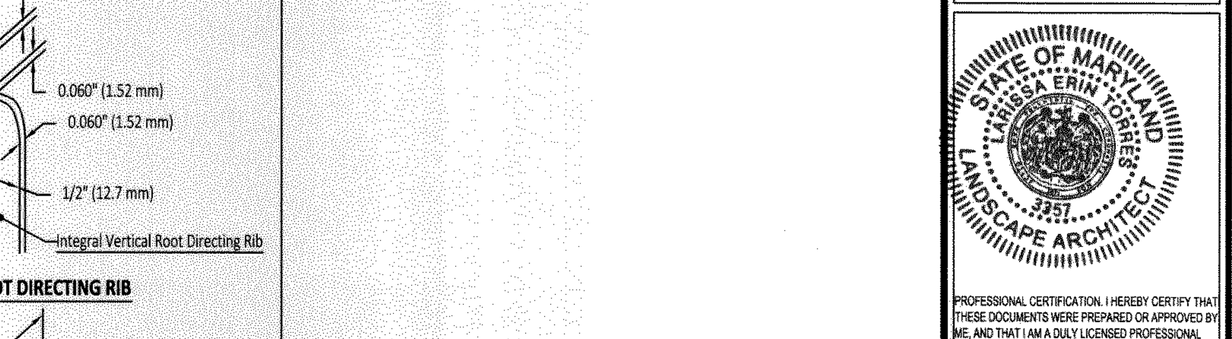

PROFESSIONAL CERTIFICATION. I HEREBY CERTIFY THAT THESE DOCUMENTS WERE PREPARED OR APPROVED BY ME, AND THAT I AM A DULY LICENSED PROFESSIONAL ENGINEER UNDER THE LAWS OF THE STATE OF MARYLAND.
License No.: 21875 Expiration Date: 2/12/16

SHEET TITLE
GRADING PERMIT NO.: GRD 14 - 0006
PLANTING DETAILS

PROJECT NO.	130003.01
SCALE	AS SHOWN
DATE	5/30/2014
DRAWN BY	JDS/CLW
CHECKED BY	PVM/TJC
DRAWING NO.	L2.3