APPENDIX D

Manual Turning Movement Count Data

February Count Data

McMahon Associates, Inc.

Transportation Engineers and Planners

425 Commerce Drive, Suite 200
Fort Washington, PA 19034

Municipality: Annapolis
Location: Forest Drive &
Hilltop Lane
Counter/Countboard No.: JB

File Name : annapolis07w
Site Code : 11061607
Start Date : 2/10/2011
Page No : 1

Groups Printed- Unshifted

	Forest Dr Southbound			Hilltop Ln Westbound				Forest Dr Northbound					
Start Time	Left	Thru	HV	Left	ROR	Right	HV	Thru	Right	HV	Exclu. Total	Inclu. Total	Int. Total
06:00	24	47	10	0	28	52	1	214	0	4	15	365	380
06:15	28	63	16	0	22	76	3	228	0	1	20	417	437
06:30	33	76	12	0	35	82	1	349	0	7	20	575	595
06:45	76	119	8	0	35	111	3	407	1	12	23	749	772
Total	161	305	46	0	120	321	8	1198	1	24	78	2106	2184
07:00	71	147	10	0	32	116	3	467	0	2	15	833	848
07:15	103	223	15	0	37	104	1	476	3	4	20	946	966
07:30	159	235	17	0	22	134	4	520	2	4	25	1072	1097
07:45	169	353	24	0	32	201	4	563	1	9	37	1319	1356
Total	502	958	66	0	123	555	12	2026	6	19	97	4170	4267
08:00	119	429	15	0	13	181	2	572	0	6	23	1314	1337
08:15	155	336	15	0	20	212	6	587	4	4	25	1314	1339
08:30	142	255	13	0	39	111	4	493	1	7	24	1041	1065
08:45	109	271	20	0	50	134	9	494	3	16	45	1061	1106
Total	525	1291	63	0	122	638	21	2146	8	33	117	4730	4847
			71				16			23			
*** BREAK ***													
15:00	109	390	5	0	44	112	8	333	21	15	28	1009	1037
15:15	120	398	9	0	17	234	6	440	4	11	26	1213	1239
15:30	156	399	11	0	20	142	10	427	4	9	30	1148	1178
15:45	169	379	12	0	5	155	1	363	2	14	27	1073	1100
Total	554	1566	37	0	86	643	25	1563	31	49	111	4443	4554
16:00	142	353	9	0	9	171	2	359	1	8	19	1035	1054
16:15	198	389	10	0	20	184	7	308	3	10	27	1102	1129
16:30	170	433	1	0	7	220	3	366	5	8	12	1201	1213
16:45	174	393	5	0	6	203	3	307	4	6	14	1087	1101
Total	684	1568	25	0	42	778	15	1340	13	32	72	4425	4497
17:00	165	411	5	0	10	194	2	330	2	5	12	1112	1124
17:15	144	388	2	0	27	134	2	344	2	4	8	1039	1047
17:30	185	389	5	0	19	136	3	347	2	7	15	1078	1093
17:45	170	427	5	0	18	153	0	329	2	4	9	1099	1108
Total	664	1615	17	0	74	617	7	1350	8	20	44	4328	4372
Grand Total	3090	7303	254	0	567	3552	88	9623	67	177	519	24202	24721
Apprch %	29.7	70.3		0	13.8	86.2		99.3	0.7				
Total %	12.8	30.2		0	2.3	14.7		39.8	0.3		2.1	97.9	
			21				15			29			

McMahon Associates, Inc.

Transportation Engineers and Planners
425 Commerce Drive, Suite 200
Fort Washington, PA 19034

Municipality: Annapolis
Location: Forest Drive &
Hilltop Lane
Counter/Countboard No.: JB

File Name : annapolis07w
Site Code : 11061607
Start Date : 2/10/2011
Page No : 2

	Forest Dr Southbound			Hilltop Ln Westbound				Forest Dr Northbound			
Start Time	Left	Thru	App. Total	Left	ROR	Right	App. Total	Thru	Right	App. Total	Int. Total
Peak Hour Analysis From 06:00 to 11:45 - Peak 1 of 1											
Peak Hour for Entire Intersection Begins at 07:30											
07:30	159	235	394	0	22	134	156	520	2	522	1072
07:45	169	353	522	0	32	201	233	563	1	564	1319
08:00	119	429	548	0	13	181	194	572	0	572	1314
08:15	155	336	491	0	20	212	232	587	4	591	1314
Total Volume	602	1353	1955	0	87	728	815	2242	7	2249	5019
% App. Total	30.8	69.2		0	10.7	89.3		99.7	0.3		
PHF	.891	.788	.892	.000	.680	.858	.874	.955	.438	.951	.951
			4%		0.27		2%			1%	

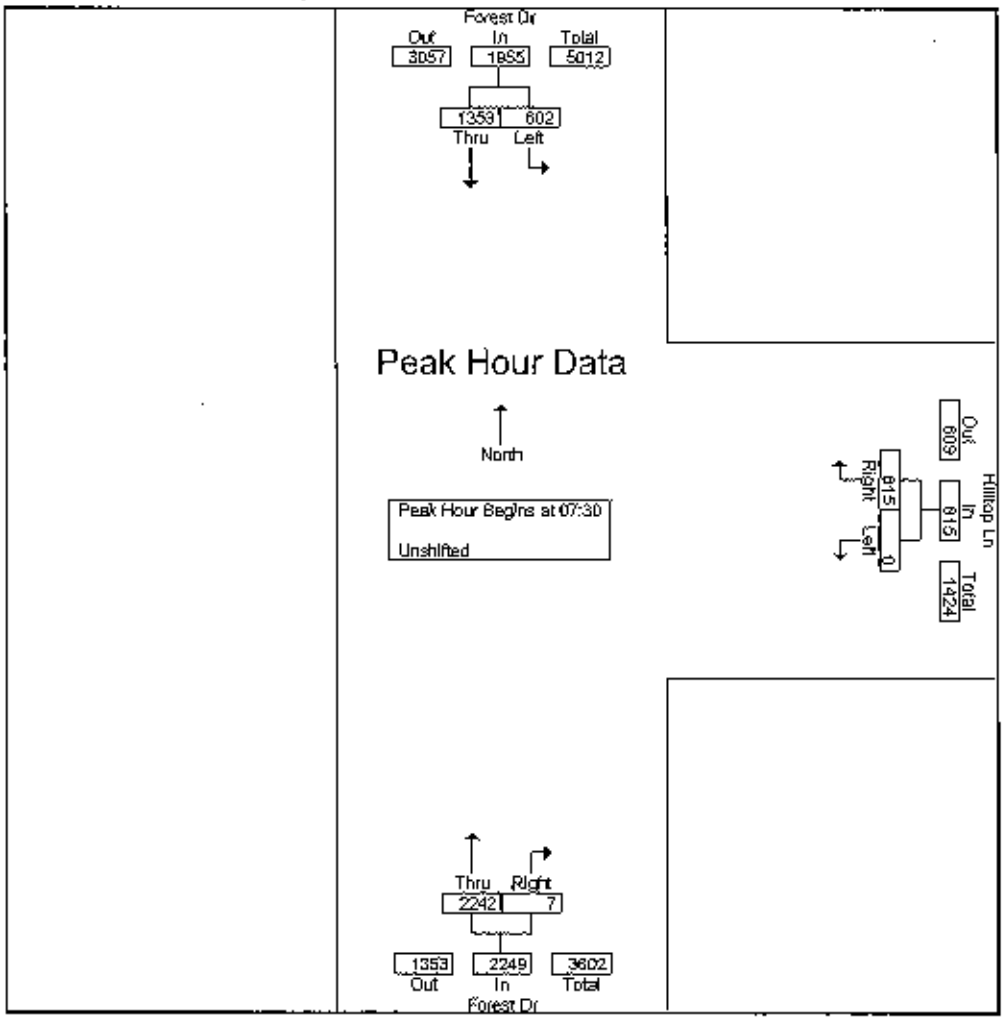

McMahon Associates, Inc.

Transportation Engineers and Planners

425 Commerce Drive, Suite 200
Fort Washington, PA 19034

Municipality: Annapolis
Location: Forest Drive &
Hilltop Lane
Counter/Countboard No.: JB

File Name : annapolis07w
Site Code : 11061607
Start Date : 2/10/2011
Page No : 3

	Forest Dr Southbound			Hilltop Ln Westbound				Forest Dr Northbound			
Start Time	Left	Thru	App. Total	Left	ROR	Right	App. Total	Thru	Right	App. Total	Int. Total
Peak Hour Analysis From 12:00 to 17:45 - Peak 1 of 1											
Peak Hour for Entire Intersection Begins at 16:15											
16:15	**198**	389	587	0	20	184	204	308	3	311	1102
16:30	170	**433**	**603**	0	7	**220**	**227**	**366**	**5**	**371**	**1201**
16:45	174	393	567	0	6	203	209	307	4	311	1087
17:00	165	411	576	0	10	194	204	330	2	332	1112
Total Volume	707	1626	2333	0	43	801	844	1311	14	1325	4502
% App. Total	30.3	69.7		0	5.1	94.9		98.9	1.1		
PHF	.893	.939	.967	.000	.538	.910	.930	.895	.700	.893	.937
			1%		0.43		2%			2%	

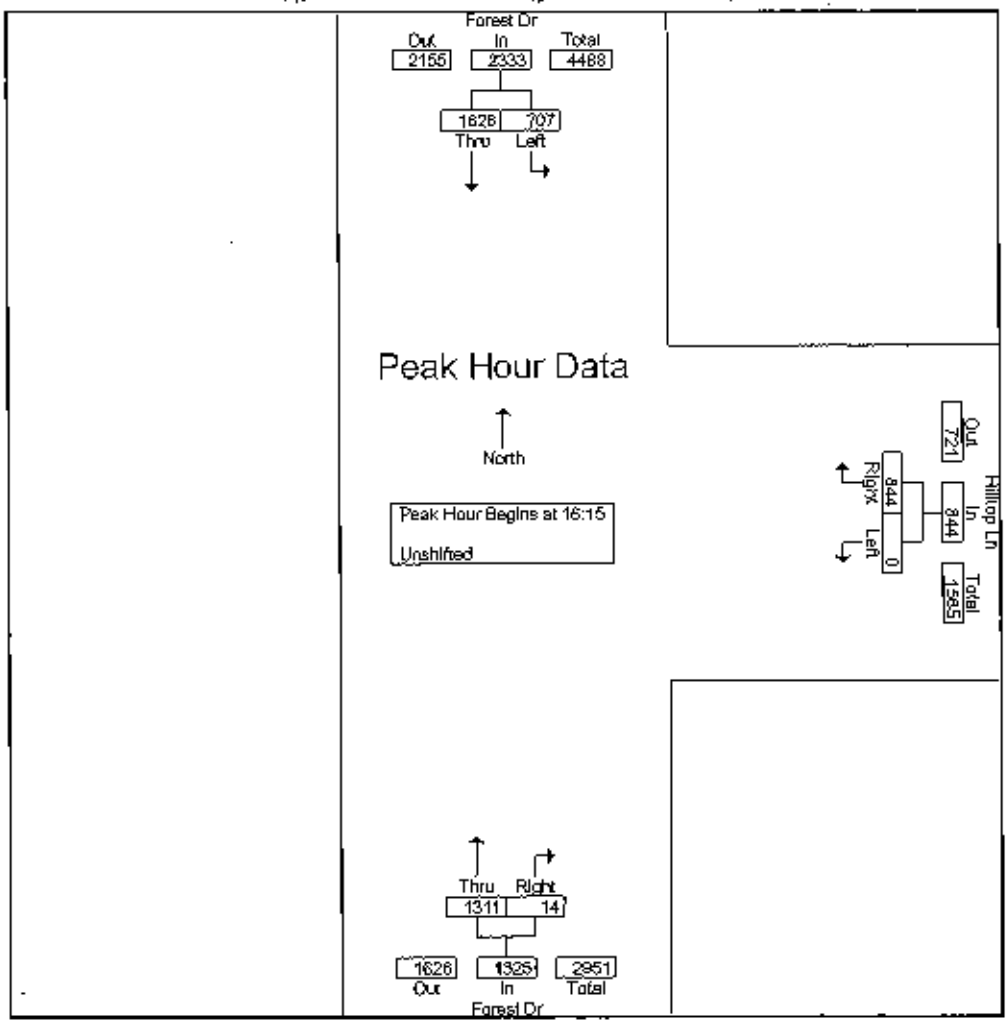

McMahon Associates, Inc.

Transportation Engineers and Planners

425 Commerce Drive, Suite 200
Fort Washington, PA 19034

Municipality: Annapolis
Location: Forest Drive &
Hilltop Lane
Counter/Countboard No.: TD

File Name : annapolis07s
Site Code : 11061607
Start Date : 1/29/2011
Page No : 1

Groups Printed- Unshifted

	Forest Dr Southbound			Hilltop Ln Westbound			Forest Dr Northbound					
Start Time	Left	Thru	HV	Left	Right	HV	Thru	Right	HV	Exclu. Total	Inclu. Total	Int. Total
12:00	103	276	1	0	152	10	342	1	5	16	874	890
12:15	104	311	5	0	124	4	360	1	5	14	900	914
12:30	108	323	5	0	158	3	316	1	4	12	906	918
12:45	92	326	5	0	122	0	314	2	4	9	856	865
Total	407	1236	16	0	556	17	1332	5	18	51	3536	3587
13:00	104	301	6	0	136	3	331	1	3	12	873	885
13:15	119	298	3	0	140	4	277	1	3	10	835	845
13:30	124	275	3	0	131	1	336	1	3	7	867	874
13:45	124	278	5	0	126	2	312	1	4	11	841	852
Total	471	1152	17	0	533	10	1256	4	13	40	3416	3456
14:00	106	287	5	0	133	4	336	2	3	12	864	876
14:15	110	315	1	0	129	2	304	0	6	9	858	867
14:30	130	328	6	0	147	20	320	3	6	32	928	960
14:45	139	334	6	0	108	3	300	3	4	13	884	897
Total	485	1264	18	0	517	29	1260	8	19	66	3534	3600
Grand Total	1363	3652	51	0	1606	56	3848	17	50	157	10486	10643
Apprch %	27.2	72.8		0	100		99.6	0.4				
Total %	13	34.8		0	15.3		36.7	0.2		1.5	98.5	

McMahon Associates, Inc.

Transportation Engineers and Planners
425 Commerce Drive, Suite 200
Fort Washington, PA 19034

Municipality: Annapolis
Location: Forest Drive &
Hilltop Lane
Counter/Countboard No.: TD

File Name : annapolis07s
Site Code : 11061607
Start Date : 1/29/2011
Page No : 2

	Forest Dr Southbound			Hilltop Ln Westbound			Forest Dr Northbound			
Start Time	Left	Thru	App. Total	Left	Right	App. Total	Thru	Right	App. Total	Int. Total
Peak Hour Analysis From 12:00 to 14:45 - Peak 1 of 1										
Peak Hour for Entire Intersection Begins at 12:00										
12:00	103	276	379	0	152	152	342	1	343	874
12:15	104	311	415	0	124	124	360	1	361	900
12:30	108	323	431	0	158	158	316	1	317	906
12:45	92	326	418	0	122	122	314	2	316	856
Total Volume	407	1236	1643	0	556	556	1332	5	1337	3536
% App. Total	24.8	75.2		0	100		99.6	0.4		
PHF	.942	.948	.953	.000	.860	.860	.925	.625	.926	.976
			12			3%			1%	

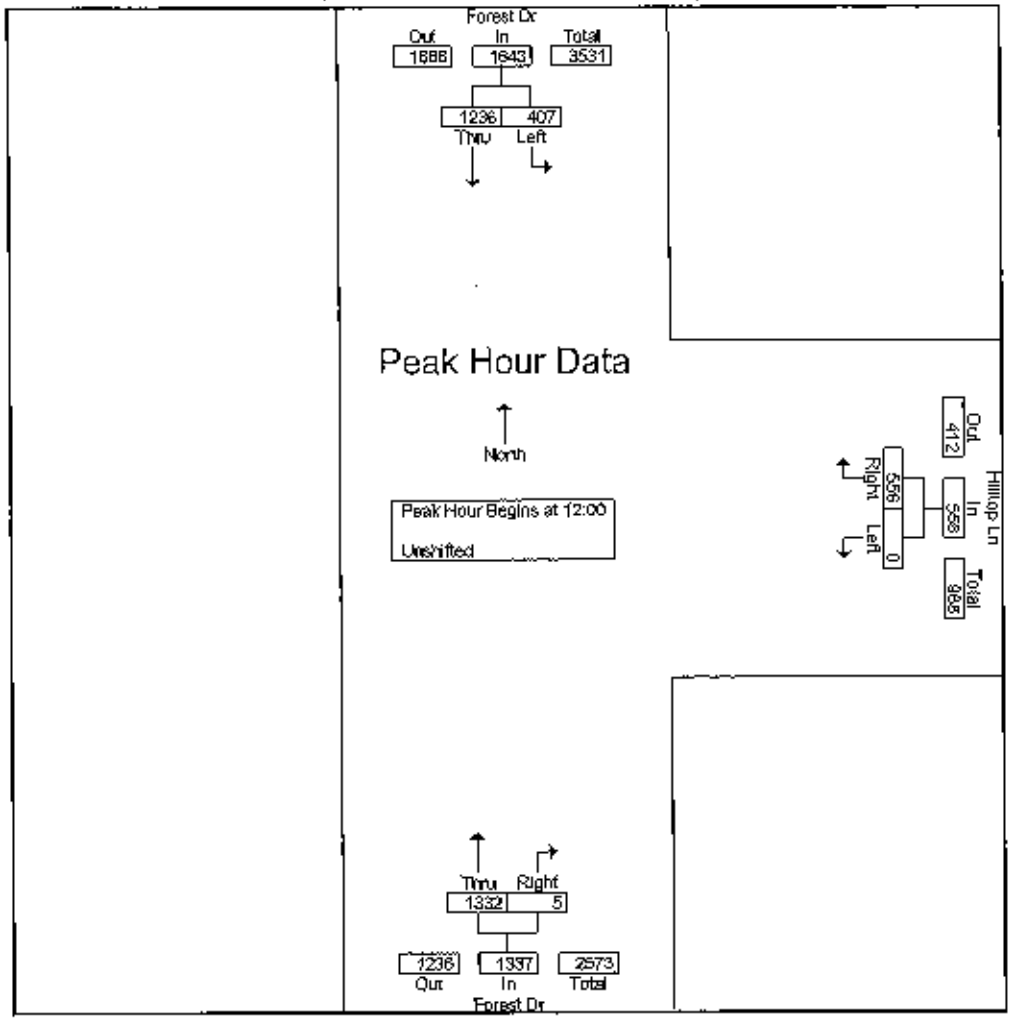

③

McMahon Associates, Inc.

Transportation Engineers and Planners

425 Commerce Drive, Suite 200
Fort Washington, PA 19034

Municipality: Annapolis
Location: Forest Drive & Spa Road
Counter/Countboard No.: BW

File Name : annapolis06w
Site Code : 11061106
Start Date : 2/3/2011
Page No : 1

Groups Printed- Unshifted

	Forest Drive Southbound				Spa Rd Westbound				Forest Drive Northbound				Spa Rd Eastbound						
Start Time	Left	Thru	Right	HV	Left	Thru	Right	HV	Left	Thru	Right	HV	Left	Thru	Right	HV	Exclu. Total	Inclu. Total	Int. Total
06:00	0	28	4	3	4	2	1	3	0	181	19	4	21	4	1	0	10	265	275
06:15	1	54	8	16	8	0	3	0	0	189	10	6	27	3	0	0	22	303	325
06:30	0	61	9	18	5	2	3	1	0	224	15	7	34	4	0	0	26	357	383
06:45	2	86	8	8	17	5	2	2	0	314	30	10	28	8	2	1	21	502	523
Total	3	229	29	45	34	9	9	6	0	908	74	27	110	19	3	1	79	1427	1506
07:00	3	108	30	9	13	9	2	0	0	340	26	3	52	14	2	2	14	599	613
07:15	1	151	34	11	15	6	3	2	0	352	33	4	44	11	3	1	18	653	671
07:30	3	176	36	17	22	13	1	1	0	355	44	5	62	41	1	3	26	754	780
07:45	3	207	28	15	31	15	4	4	1	371	65	13	70	38	6	3	35	839	874
Total	10	642	128	52	81	43	10	7	1	1418	168	25	228	104	12	9	93	2845	2938
08:00	2	327	43	12	61	24	3	0	0	339	65	7	75	30	6	2	21	975	996
08:15	6	223	36	17	66	11	15	4	2	431	68	7	65	23	6	1	29	952	981
08:30	4	184	27	11	53	16	13	2	1	402	73	6	56	11	6	1	20	846	866
08:45	4	176	18	12	32	7	4	3	0	353	59	14	52	25	5	8	37	735	772
Total	16	910	124	52	212	58	35	9	3	1525	265	34	248	89	23	12	107	3508	3615
				55				10				23				7			
*** BREAK ***																			
15:00	2	330	22	4	65	30	12	3	2	213	30	13	45	15	8	5	25	774	799
15:15	2	314	51	7	75	30	7	0	2	246	45	18	42	18	4	1	26	836	862
15:30	4	380	43	13	61	10	4	0	1	284	57	9	54	16	6	0	22	920	942
15:45	1	311	43	5	73	18	5	3	1	265	51	8	51	14	5	2	18	838	856
Total	9	1335	159	29	274	88	28	6	6	1008	183	48	192	63	23	8	91	3368	3459
16:00	2	318	37	8	75	20	1	3	3	258	31	14	58	18	6	3	28	827	855
16:15	4	330	37	6	80	16	3	1	0	239	40	10	50	26	5	2	19	830	849
16:30	5	334	34	8	78	29	3	2	2	237	37	6	39	16	2	1	17	816	833
16:45	1	331	43	1	72	19	7	0	1	282	42	8	45	14	6	2	11	863	874
Total	12	1313	151	23	305	84	14	6	6	1016	150	38	192	74	19	8	75	3336	3411
17:00	3	337	39	5	64	27	8	1	0	239	45	5	43	13	1	2	13	839	852
17:15	2	367	43	1	89	22	5	0	4	265	48	4	31	21	4	1	6	901	907
17:30	3	373	43	1	86	21	4	0	0	254	45	3	38	12	3	1	5	882	887
17:45	3	349	54	3	94	27	5	0	1	224	30	5	28	8	4	0	8	827	835
Total	11	1426	179	10	353	97	22	1	5	982	168	17	140	54	12	4	32	3449	3481
Grand Total	61	5855	770	211	1259	379	118	35	21	6857	1008	189	1110	403	92	42	477	17933	18410
Apprch %	0.9	87.6	11.5		71.7	21.6	6.7		0.3	87	12.8		69.2	25.1	5.7				
Total %	0.3	32.6	4.3		7	2.1	0.7		0.1	38.2	5.6		6.2	2.2	0.5		2.6	97.4	
				8				1				10				6			

McMahon Associates, Inc.

Transportation Engineers and Planners
425 Commerce Drive, Suite 200
Fort Washington, PA 19034

Municipality: Annapolis
Location: Forest Drive &
Spa Road
Counter/Countboard No.: BW

File Name : annapolis06w
Site Code : 11061106
Start Date : 2/3/2011
Page No : 2

	Forest Drive Southbound				Spa Rd Westbound				Forest Drive Northbound				Spa Rd Eastbound				
Start Time	Left	Thru	Right	App. Total	Left	Thru	Right	App. Total	Left	Thru	Right	App. Total	Left	Thru	Right	App. Total	Int. Total
Peak Hour Analysis From 06:00 to 11:45 - Peak 1 of 1																	
Peak Hour for Entire Intersection Begins at 07:45																	
07:45	3	207	28	238	31	15	4	50	1	371	65	437	70	38	6	114	839
08:00	2	327	43	372	61	24	3	88	0	339	65	404	75	30	6	111	975
08:15	6	223	36	265	66	11	15	92	2	431	68	501	65	23	6	94	952
08:30	4	184	27	215	53	16	13	82	1	402	73	476	56	11	6	73	846
Total Volume	15	941	134	1090	211	66	35	312	4	1543	271	1818	266	102	24	392	3612
% App. Total	1.4	86.3	12.3		67.6	21.2	11.2		0.2	84.9	14.9		67.9	26	6.1		
PHF	.625	.719	.779	.733	.799	.688	.583	.848	.500	.895	.928	.907	.867	.671	1.000	.860	.926
				5%				3%				1%				2%	

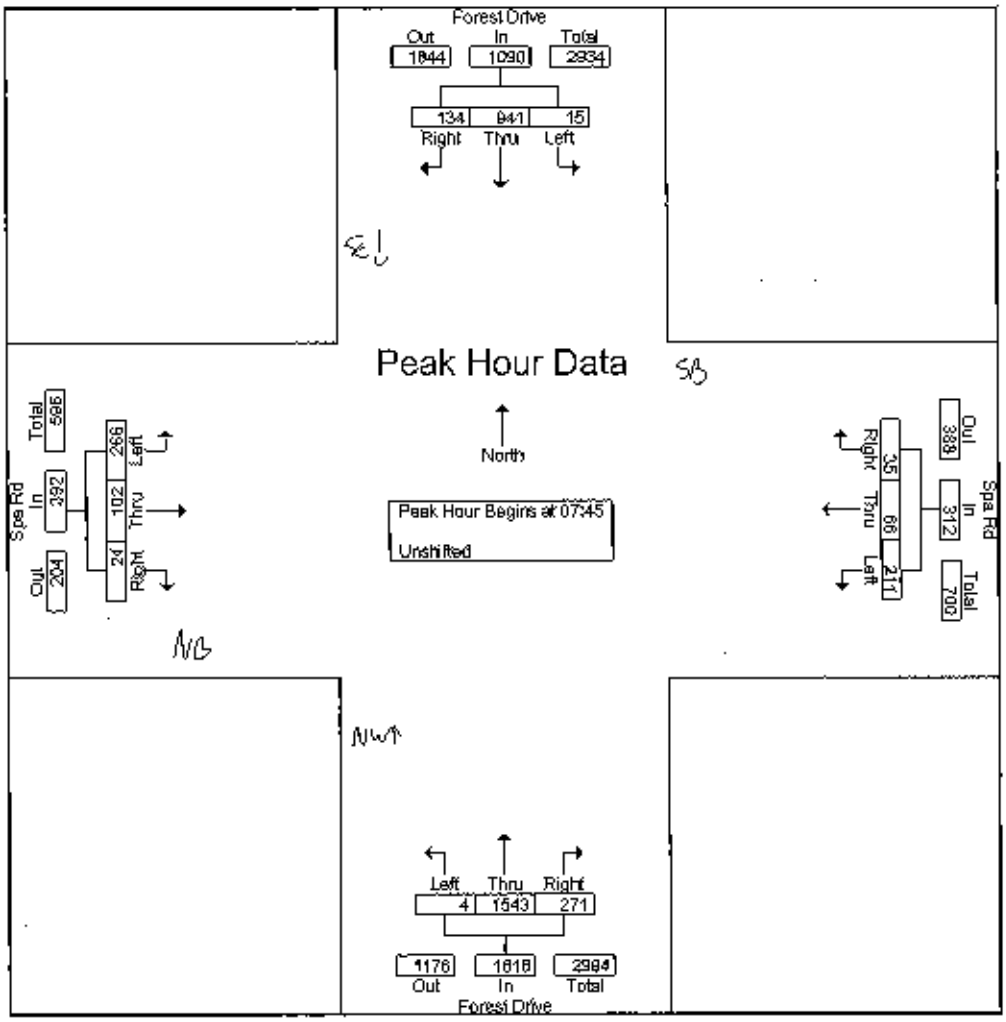

McMahon Associates, Inc.

Transportation Engineers and Planners

425 Commerce Drive, Suite 200
Fort Washington, PA 19034

Municipality: Annapolis
Location: Forest Drive &
Spa Road
Counter/Countboard No.: BW

File Name : annapolis06w
Site Code : 11061106
Start Date : 2/3/2011
Page No : 3

	Forest Drive Southbound				Spa Rd Westbound				Forest Drive Northbound				Spa Rd Eastbound				
Start Time	Left	Thru	Right	App. Total	Left	Thru	Right	App. Total	Left	Thru	Right	App. Total	Left	Thru	Right	App. Total	Int. Total
Peak Hour Analysis From 12:00 to 17:45 - Peak 1 of 1																	
Peak Hour for Entire Intersection Begins at 16:45																	
16:45	1	331	43	375	72	19	7	98	1	282	42	325	45	14	6	65	863
17:00	3	337	39	379	84	27	8	119	0	239	45	284	43	13	1	57	839
17:15	2	367	43	412	89	22	5	116	4	265	48	317	31	21	4	56	901
17:30	3	373	43	419	86	21	4	111	0	254	45	299	38	12	3	53	882
Total Volume	9	1408	168	1585	331	89	24	444	5	1040	180	1225	157	60	14	231	3485
% App. Total	0.6	88.8	10.6		74.5	20	5.4		0.4	84.9	14.7		68	26	6.1		
PHF	.750	.944	.977	.946	.930	.824	.750	.933	.313	.922	.938	.942	.872	.714	.583	.888	.967

1% 0% 2% 3%

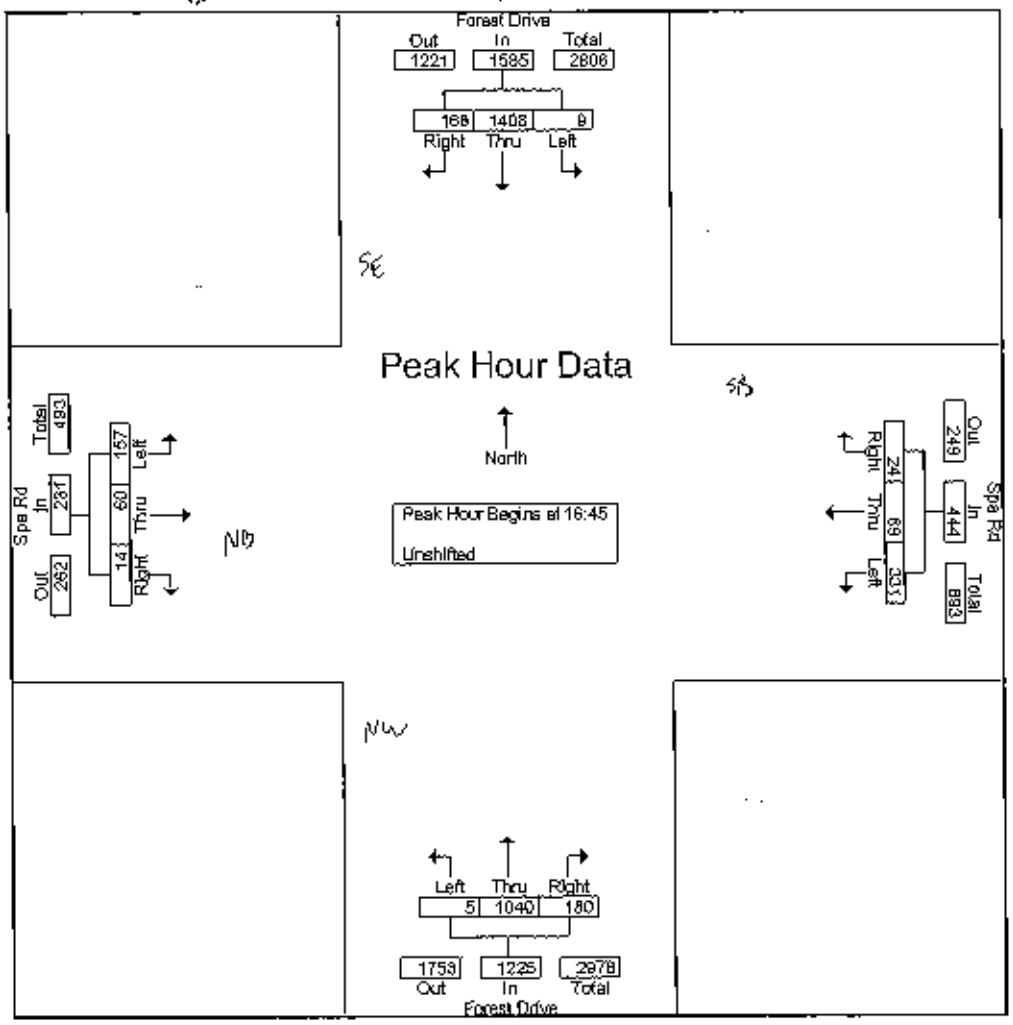

McMahon Associates, Inc.

Transportation Engineers and Planners
425 Commerce Drive, Suite 200
Fort Washington, PA 19034

Municipality: Annapolis
Location: Forest Drive & Spa Road
Counter/Countboard No.: BW

File Name : annapolis06s
Site Code : 11061606
Start Date : 1/29/2011
Page No : 1

Groups Printed- Unshifted

	Forest Dr Southbound				Spa Rd Westbound				Forest Dr Northbound				Spa Rd Eastbound						
Start Time	Left	Thru	Right	HV	Left	Thru	Right	HV	Left	Thru	Right	HV	Left	Thru	Right	HV	Indu. Total	Indu. Total	Int. Total
12:00	0	209	22	2	50	8	7	0	1	255	37	6	50	8	4	0	8	651	659
12:15	1	277	27	3	38	12	10	1	1	275	36	5	38	12	5	0	9	732	741
12:30	2	258	40	6	41	16	3	0	0	259	35	5	48	16	5	2	13	723	736
12:45	1	307	47	3	43	8	6	0	2	256	35	4	25	8	5	0	7	743	750
Total	4	1051	136	14	172	44	26	1	4	1045	143	20	161	44	19	2	37	2849	2886
13:00	1	240	43	2	44	16	2	0	2	269	30	5	34	16	9	1	8	706	714
13:15	0	293	36	3	41	7	5	0	1	225	35	1	36	6	5	0	4	690	694
13:30	2	236	24	2	39	12	2	0	1	255	24	3	47	11	3	0	5	656	661
13:45	0	269	40	1	39	12	3	0	1	280	25	2	38	11	3	2	5	721	726
Total	3	1038	143	8	163	47	12	0	5	1029	114	11	155	44	20	3	22	2773	2795
14:00	2	259	32	5	39	12	5	0	0	258	31	2	45	15	4	0	7	702	709
14:15	4	261	31	1	44	9	2	0	0	249	37	3	36	11	6	3	7	692	699
14:30	4	309	43	3	57	17	5	5	0	241	28	4	26	7	2	0	12	739	751
14:45	1	295	30	6	46	12	6	0	0	301	28	1	30	14	6	2	9	771	780
Total	11	1124	136	15	186	50	18	5	0	1049	124	10	139	47	18	5	35	2904	2939
Grand Total	18	3213	415	37	523	141	56	6	9	3123	381	41	455	135	57	10	94	8526	8620
Apprch %	0.5	88.1	11.4		72.6	19.6	7.8		0.3	88.9	10.8		70.3	20.9	8.8				
Total %	0.2	37.7	4.9		6.1	1.7	0.7		0.1	36.6	4.5		5.3	1.6	0.7		1.1	98.9	
				14				1				14				3			

McMahon Associates, Inc.

Transportation Engineers and Planners
425 Commerce Drive, Suite 200
Fort Washington, PA 19034

Municipality: Annapolis
Location: Forest Drive &
Spa Road
Counter/Countboard No.: BW

File Name : annapolis06s
Site Code : 11061606
Start Date : 1/29/2011
Page No : 2

	Forest Dr Southbound				Spa Rd Westbound				Forest Dr Northbound				Spa Rd Eastbound				
Start Time	Left	Thru	Right	App. Total	Left	Thru	Right	App. Total	Left	Thru	Right	App. Total	Left	Thru	Right	App. Total	Int. Total
Peak Hour Analysis From 12:00 to 14:45 - Peak 1 of 1																	
Peak Hour for Entire Intersection Begins at 12:15																	
12:15	1	277	27	305	38	12	10	60	1	275	36	312	38	12	5	55	732
12:30	2	258	40	300	41	16	3	60	0	259	35	294	48	16	5	69	723
12:45	1	307	47	355	43	8	6	57	2	256	35	293	25	8	5	38	743
13:00	1	240	43	284	44	16	2	62	2	269	30	301	34	16	9	59	706
Total Volume	5	1082	157	1244	166	52	21	239	5	1059	136	1200	145	52	24	221	2904
% App. Total	0.4	87	12.6		69.5	21.8	8.8		0.4	88.2	11.3		65.6	23.5	10.9		
PHF	.625	.881	.835	.876	.943	.813	.525	.964	.625	.963	.944	.962	.755	.813	.667	.801	.977
			1%				0%				2%					1%	

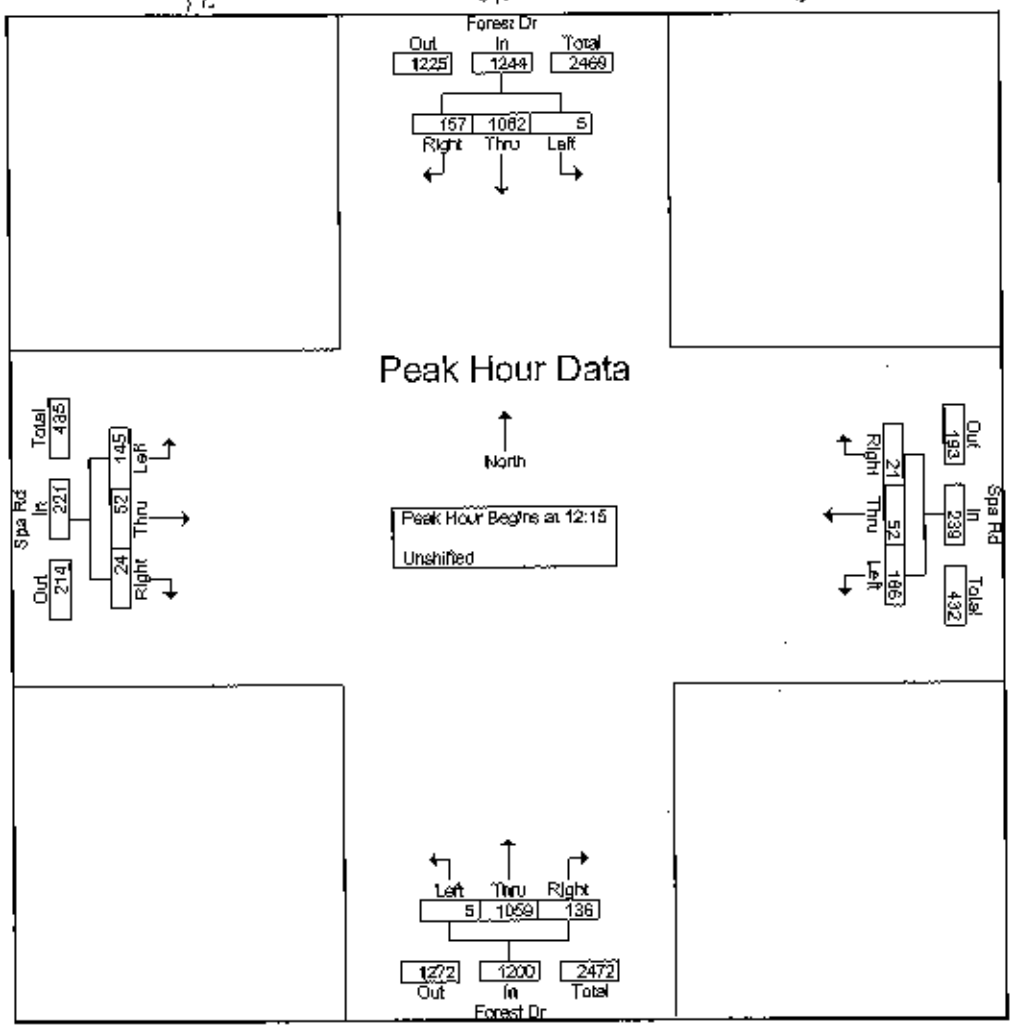

McMahon Associates, Inc.

Transportation Engineers and Planners

425 Commerce Drive, Suite 200
Fort Washington, PA 19034

Municipality: Annapolis
Location: Forest Drive &
Gemini Drive / Business Access
Counter/Board #: CH

File Name : annapolis05a
Site Code : 11061105
Start Date : 2/3/2011
Page No : 1

Groups Printed- Unshifted

	Forest Dr Southbound				Gemini Dr Westbound				Forest Dr Northbound				Business Access Eastbound						
Start Time	Left	Thru	Right	HV	Left	Thru	Right	HV	Left	Thru	Right	HV	Left	Thru	Right	HV	Int. Total	Int. Total	Int. Total
07:00	8	124	0	8	1	0	19	0	0	422	4	0	0	0	0	0	8	578	586
07:15	19	169	0	8	2	0	22	0	0	431	1	2	0	0	0	0	10	644	654
07:30	15	208	10	15	0	0	29	0	0	416	4	5	0	0	0	0	20	682	702
07:45	18	265	0	13	6	0	27	1	0	390	1	8	0	0	0	0	22	707	729
Total	60	766	10	44	9	0	97	1	0	1659	10	15	0	0	0	0	60	2611	2671
08:00	19	346	0	5	6	0	22	0	0	391	0	6	0	0	0	0	11	784	795
08:15	20	237	1	8	4	1	30	2	0	485	1	3	0	0	0	0	13	779	792
08:30	15	207	0	12	6	0	21	2	0	441	4	8	0	0	0	0	22	694	716
08:45	16	213	1	6	4	0	15	0	0	392	5	15	0	0	0	0	21	646	667
Total	70	1003	2	31	20	1	88	4	0	1709	10	32	0	0	0	0	67	2903	2970
Grand Total	130	1769	12	75	29	1	185	5	0	3368	20	47	0	0	0	0	127	5514	5641
Apprch %	6.8	92.6	0.6		13.5	0.5	86		0	99.4	0.6		0	0	0				
Total %	2.4	32.1	0.2		0.5	0	3.4		0	61.1	0.4		0	0	0		2.3	97.7	
				38				5				25				0			

McMahon Associates, Inc.

Transportation Engineers and Planners
425 Commerce Drive, Suite 200
Fort Washington, PA 19034

Municipality: Annapolis
Location: Forest Drive &
Gemini Drive / Business Access
Counter/Board #: CH

File Name : annapolis05a
Site Code : 11061105
Start Date : 2/3/2011
Page No : 2

	Forest Dr Southbound				Gemini Dr Westbound				Forest Dr Northbound				Business Access Eastbound				
Start Time	Left	Thru	Right	App. Total	Left	Thru	Right	App. Total	Left	Thru	Right	App. Total	Left	Thru	Right	App. Total	Int. Total
Peak Hour Analysis From 07:00 to 08:45 - Peak 1 of 1																	
Peak Hour for Entire Intersection Begins at 07:45																	
07:45	18	265	0	283	6	0	27	33	0	390	1	391	0	0	0	0	707
08:00	19	346	0	365	6	0	22	28	0	391	0	391	0	0	0	0	784
08:15	20	237	1	258	4	1	30	35	0	465	1	466	0	0	0	0	779
08:30	15	207	0	222	6	0	21	27	0	441	4	445	0	0	0	0	694
Total Volume	72	1055	1	1128	22	1	100	123	0	1707	6	1713	0	0	0	0	2964
% App. Total	6.4	93.5	0.1		17.9	0.8	81.3		0	99.6	0.4		0	0	0		
PHF	.900	.762	.250	.773	.917	.250	.833	.879	.000	.880	.375	.881	.000	.000	.000	.000	.945
				3%				4%				1%				0%	

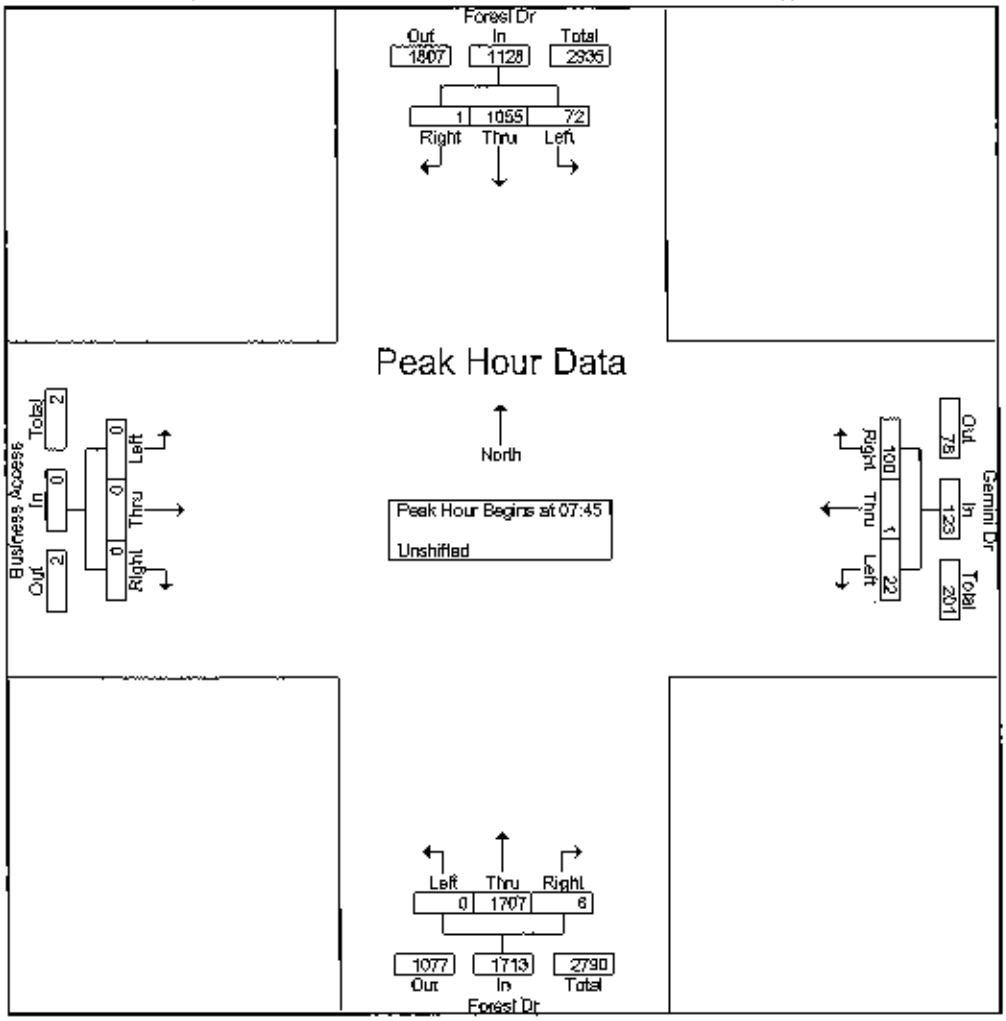

McMahon Associates, Inc.

Transportation Engineers and Planners
425 Commerce Drive, Suite 200
Fort Washington, PA 19034

Municipality: Annapolis
Location: Forest Drive &
Gemini Drive / Business Access
Counter/Board #: CH

File Name : annapolis05a
Site Code : 11061105
Start Date : 2/3/2011
Page No : 1

Groups Printed- Pedestrians

	Forest Dr Southbound				Gemini Dr Westbound				Forest Dr Northbound				Business Access Eastbound						
Start Time	Left	Thru	Right	SW Peds	Left	Thru	Right	NB Peds	Left	Thru	Right	SW Peds	Left	Thru	Right	NB Peds	Exc. Total	Inclu. Total	Inc. Total
*** BREAK ***																			
07:30	0	0	0	0	0	0	0	1	0	0	0	1	0	0	0	0	2	0	2
*** BREAK ***																			
Total	0	0	0	0	0	0	0	1	0	0	0	1	0	0	0	0	2	0	2
*** BREAK ***																			
08:15	0	0	0	1	0	0	0	0	0	0	0	1	0	0	0	1	3	0	3
*** BREAK ***																			
08:45	0	0	0	0	0	0	0	1	0	0	0	0	0	0	0	0	1	0	1
Total	0	0	0	1	0	0	0	1	0	0	0	1	0	0	0	1	4	0	4
Grand Total	0	0	0	1	0	0	0	2	0	0	0	2	0	0	0	1	6	0	6
Apprch %	0	0	0		0	0	0		0	0	0		0	0	0				
Total %																	100	0	

McMahon Associates, Inc.

Transportation Engineers and Planners

425 Commerce Drive, Suite 200
Fort Washington, PA 19034

Municipality: Annapolis
Location: Forest Drive &
Gemini Drive / Business Access
Counter/Countboard No.:JB

File Name : annapolis05p
Site Code : 11061605
Start Date : 2/9/2011
Page No : 1

Groups Printed- Unshifted

	Forest Dr Southbound					Gemini Dr Westbound					Forest Dr Northbound					Business Access Eastbound							
Start Time	Left	Thru	ROR	Right	HV	Left	Thru	ROR	Right	HV	Left	Thru	ROR	Right	HV	Left	Thru	ROR	Right	HV	App. Total	Int. Total	Int. Total
15:00	35	464	0	0	10	7	0	12	3	1	0	277	0	4	21	0	0	0	0	0	32	802	834
15:15	30	413	0	0	6	10	0	8	3	0	0	316	0	7	9	0	0	0	0	0	15	787	802
15:30	21	363	0	0	11	6	0	13	4	0	0	383	0	8	9	0	0	0	0	0	20	798	818
15:45	39	360	0	0	3	6	0	8	2	1	1	333	0	3	16	0	0	0	0	0	20	752	772
Total	125	1600	0	0	30	29	0	41	12	2	1	1309	0	22	55	0	0	0	0	0	87	3139	3226
16:00	26	408	0	0	5	8	0	11	3	0	0	335	0	8	5	0	0	0	0	0	10	799	809
16:15	41	413	0	0	5	9	0	17	2	1	0	316	0	4	7	0	0	0	0	0	13	802	815
16:30	37	424	0	0	4	6	0	14	4	1	0	291	0	2	5	0	0	0	0	0	10	778	788
16:45	24	408	0	0	4	8	0	11	9	1	1	321	0	9	2	0	0	0	0	0	7	791	798
Total	128	1653	0	0	18	31	0	53	18	3	1	1263	0	23	19	0	0	0	0	0	40	3170	3210
17:00	25	407	0	0	5	9	0	14	7	0	0	293	0	4	5	1	0	0	0	0	10	760	770
17:15	32	460	0	0	2	9	0	10	7	0	0	295	0	11	2	0	0	0	0	0	4	824	828
17:30	36	405	0	0	3	6	0	9	3	0	0	313	0	9	7	0	0	0	0	0	10	781	791
17:45	27	454	0	0	6	7	0	8	7	0	0	290	0	1	3	0	0	0	0	0	9	794	803
Total	120	1726	0	0	16	31	0	41	24	0	0	1191	0	25	17	1	0	0	0	0	33	3159	3192
Grand Total	373	4979	0	0	64	91	0	135	54	5	2	3763	0	70	91	1	0	0	0	0	160	9468	9628
Approch %	7	93	0	0		32.5	0	48.2	19.3		0.1	98.1	0	1.8		100	0	0	0				
Total %	3.9	52.6	0	0		1	0	1.4	0.6		0	39.7	0	0.7		0	0	0	0		1.7	98.3	

McMahon Associates, Inc.

Transportation Engineers and Planners

425 Commerce Drive, Suite 200
Fort Washington, PA 19034

Municipality: Annapolis
Location: Forest Drive &
Gemini Drive / Business Access
Counter/Countboard No.:JB

File Name : annapolis05p
Site Code : 11061605
Start Date : 2/9/2011
Page No : 2

	Forest Dr Southbound					Gemini Dr Westbound					Forest Dr Northbound					Business Access Eastbound					
Start Time	Left	Thru	ROR	Right	App. Total	Left	Thru	ROR	Right	App. Total	Left	Thru	ROR	Right	App. Total	Left	Thru	ROR	Right	App. Total	Int. Total
Peak Hour Analysis From 15:00 to 17:45 - Peak 1 of 1																					
Peak Hour for Entire Intersection Begins at 16:00																					
16:00	26	408	0	0	434	8	0	11	3	22	0	335	0	8	343	0	0	0	0	0	799
16:15	41	413	0	0	454	9	0	17	2	28	0	316	0	4	320	0	0	0	0	0	802
16:30	37	424	0	0	461	6	0	14	4	24	0	291	0	2	293	0	0	0	0	0	778
16:45	24	408	0	0	432	8	0	11	9	28	1	321	0	9	331	0	0	0	0	0	791
Total Volume	128	1653	0	0	1781	31	0	53	18	102	1	1263	0	23	1287	0	0	0	0	0	3170
% App. Total	7.2	92.8	0	0		30.4	0	52	17.6		0.1	98.1	0	1.8		0	0	0	0		
PHF	.780	.975	.000	.000	.966	.861	.000	.779	.500	.911	.250	.943	.000	.639	.938	.000	.000	.000	.000	.000	.988
					1%			0.89		3%					1%					0%	

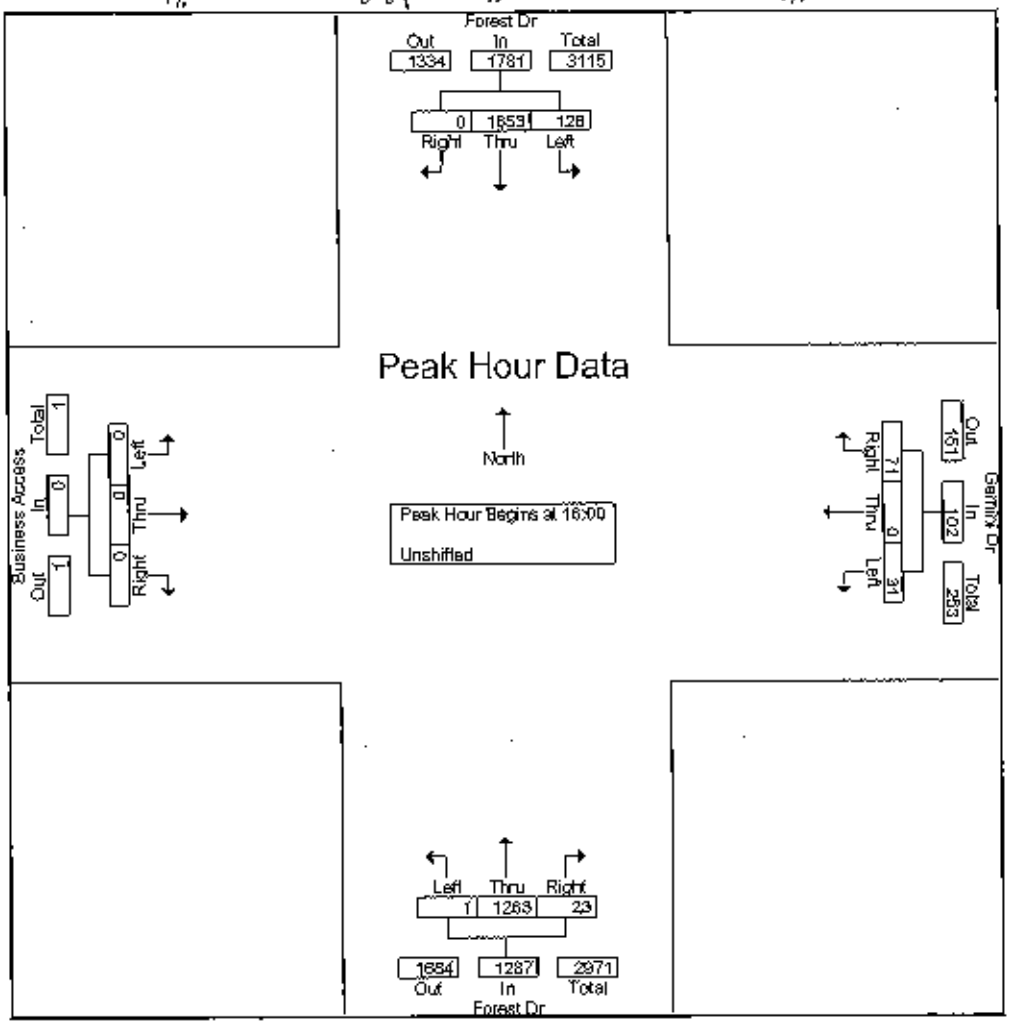

McMahon Associates, Inc.

Transportation Engineers and Planners

425 Commerce Drive, Suite 200
Fort Washington, PA 19034

Municipality: Annapolis
Location: Forest Drive &
Gemini Drive / Business Access
Counter/Countboard No.:JB

File Name : annapolis05p
Site Code : 11061605
Start Date : 2/9/2011
Page No : 1

Groups Printed- Pedestrians

	Forest Dr Southbound				Gemini Dr Westbound				Forest Dr Northbound				Business Access Eastbound						
Start Time	Left	Thru	Right	Ped	Left	Thru	Right	Ped	Left	Thru	Right	Ped	Left	Thru	Right	Ped	Excl. Total	Incl. Total	Int. Total
15:00	0	0	0	0	0	0	0	2	0	0	0	0	0	0	0	0	2	0	2
15:15	0	0	0	0	0	0	0	1	0	0	0	2	0	0	0	0	3	0	3
15:30	0	0	0	0	0	0	0	0	0	0	0	1	0	0	0	0	1	0	1
15:45	0	0	0	0	0	0	0	1	0	0	0	0	0	0	0	0	1	0	1
Total	0	0	0	0	0	0	0	4	0	0	0	3	0	0	0	0	7	0	7
16:00	0	0	0	0	0	0	0	1	0	0	0	0	0	0	0	2	3	0	3
*** BREAK ***																			
16:30	0	0	0	0	0	0	0	0	0	0	0	0	0	0	0	2	2	0	2
16:45	0	0	0	0	0	0	0	1	0	0	0	0	0	0	0	0	1	0	1
Total	0	0	0	0	0	0	0	2	0	0	0	0	0	0	0	4	6	0	6
17:00	0	0	0	0	0	0	0	1	0	0	0	1	0	0	0	1	3	0	3
17:15	0	0	0	0	0	0	0	1	0	0	0	0	0	0	0	0	1	0	1
17:30	0	0	0	0	0	0	0	0	0	0	0	1	0	0	0	0	1	0	1
17:45	0	0	0	1	0	0	0	0	0	0	0	0	0	0	0	0	1	0	1
Total	0	0	0	1	0	0	0	2	0	0	0	2	0	0	0	1	6	0	6
Grand Total	0	0	0	1	0	0	0	8	0	0	0	5	0	0	0	5	19	0	19
Apprch %	0	0	0		0	0	0		0	0	0		0	0	0				
Total %																	100	0	

McMahon Associates, Inc.

Transportation Engineers and Planners

425 Commerce Drive, Suite 200
Fort Washington, PA 19034

Municipality: Annapolis
Location: Forest Drive &
Gemini Drive / Business Access
Counter/Countboard No.: SW

File Name : annapolis05s
Site Code : 11061605
Start Date : 1/29/2011
Page No : 1

Groups Printed- Unshifted

	Forest Dr Southbound				Gemini Dr Westbound					Forest Dr Northbound					Business Access Eastbound						
Start Time	Left	Thru	Right	HV	Left	Thru	ROR	Right	HV	Left	Thru	ROR	Right	HV	Left	Thru	Right	HV	Int. Total	Int. Total	Int. Total
12:00	28	277	0	2	6	0	11	5	0	0	309	0	5	3	0	0	0	0	5	641	646
12:15	33	295	0	3	10	0	21	7	2	0	335	0	5	3	0	0	0	0	8	707	715
12:30	33	297	0	4	10	0	11	6	0	0	304	0	9	5	0	0	0	0	9	670	679
12:45	29	337	0	3	12	0	20	7	0	0	317	2	10	5	0	0	0	0	8	734	742
Total	123	1206	0	12	38	0	63	25	2	0	1265	2	30	16	0	0	0	0	30	2752	2782
13:00	21	306	0	2	5	0	16	4	1	2	289	0	6	1	0	0	0	0	4	651	655
13:15	36	289	0	0	11	0	11	4	0	0	265	2	5	2	0	0	0	0	2	623	625
13:30	29	268	0	0	11	0	11	7	0	0	308	0	5	3	0	0	0	0	3	659	662
13:45	23	271	0	2	8	0	10	8	0	0	285	2	4	3	0	0	0	0	5	611	616
Total	109	1154	0	4	35	0	48	23	1	2	1147	4	22	9	0	0	0	0	14	2544	2558
14:00	33	287	0	2	12	0	12	15	0	0	296	0	10	1	0	0	0	0	3	665	668
14:15	27	314	0	2	12	0	13	12	0	0	289	0	1	5	0	0	0	1	8	668	676
14:30	17	374	0	4	3	0	9	5	0	0	297	0	0	2	0	0	0	0	6	705	711
14:45	24	335	0	2	7	0	11	5	0	0	289	0	8	3	0	0	0	0	6	679	684
Total	101	1310	0	10	34	0	45	37	0	0	1171	0	19	11	0	0	0	1	22	2717	2739
Grand Total		3670	0	26	107	0	156	85	3	2	3583	6	71	36	0	0	0	1	66	8013	8079
Apprch %	8.3	91.7	0		30.7	0	44.8	24.4		0.1	97.8	0.2	1.9		0	0	0				
Total %	4.2	45.8	0		1.3	0	1.9	1.1		0	44.7	0.1	0.9		0	0	0		0.8	99.2	
			12					3					14					0			

McMahon Associates, Inc.

Transportation Engineers and Planners
425 Commerce Drive, Suite 200
Fort Washington, PA 19034

Municipality: Annapolis
Location: Forest Drive &
Gemini Drive / Business Access
Counter/Countboard No.: SW

File Name : annapolis05s
Site Code : 11061605
Start Date : 1/29/2011
Page No : 2

	Forest Dr Southbound				Gemini Dr Westbound					Forest Dr Northbound					Business Access Eastbound				
Start Time	Left	Thru	Right	App. Total	Left	Thru	RO R	Right	App. Total	Left	Thru	RO R	Right	App. Total	Left	Thru	Right	App. Total	Int. Total
Peak Hour Analysis From 12:00 to 14:45 - Peak 1 of 1																			
Peak Hour for Entire Intersection Begins at 12:15																			
12:15	33	295	0	328	10	0	21	7	38	0	335	0	6	341	0	0	0	0	707
12:30	33	297	0	330	10	0	11	6	27	0	304	0	9	313	0	0	0	0	670
12:45	29	337	0	366	12	0	20	7	39	0	317	2	10	329	0	0	0	0	734
13:00	21	306	0	327	5	0	16	4	25	2	289	0	8	299	0	0	0	0	651
Total Volume	116	1235	0	1351	37	0	68	24	129	2	1245	2	33	1282	0	0	0	0	2762
% App. Total																			
PHF	.879	.916	.000	.923	.771	.000	.810	.857	.827	.250	.929	.250	.825	.940	.000	.000	.000	.000	.941
				1%			0.82		2%			0.73		1%					0%

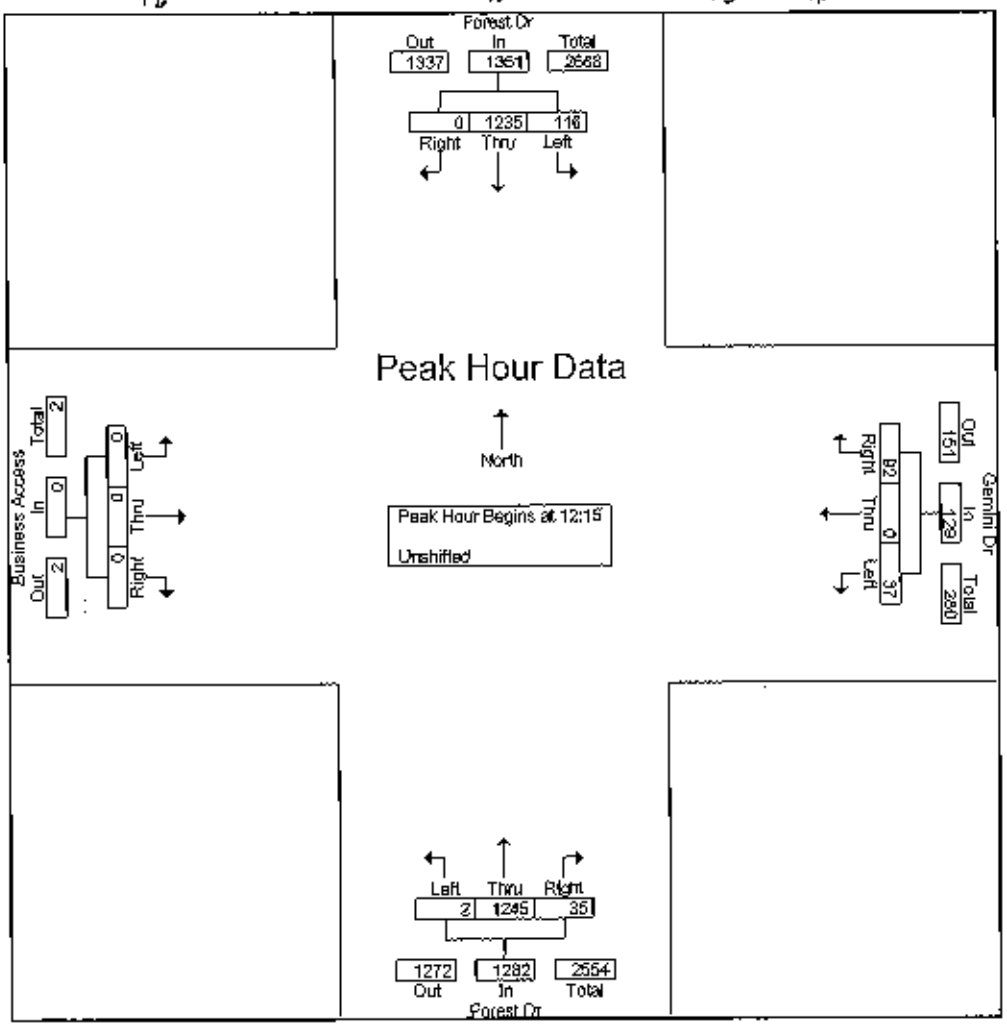

McMahon Associates, Inc.

Transportation Engineers and Planners
425 Commerce Drive, Suite 200
Fort Washington, PA 19034

Municipality: Annapolis
Location: Forest Drive &
Gemini Drive / Business Access
Counter/Countboard No.: SW

File Name : annapolis05s
Site Code : 11061605
Start Date : 1/29/2011
Page No : 1

Groups Printed- Pedestrians

	Forest Dr Southbound				Gemini Dr Westbound				Forest Dr Northbound				Business Access Eastbound						
Start Time	Left	Thru	Right	E/W Peds	Left	Thru	Right	N/S Peds	Left	Thru	Right	S/W Peds	Left	Thru	Right	N/S Peds	Stadm. Total	Indu. Total	Int. Total
*** BREAK ***																			
13:15	0	0	0	0	0	0	0	0	0	0	0	1	0	0	0	0	1	0	1
13:30	0	0	0	0	0	0	0	0	0	0	0	1	0	0	0	0	1	0	1
13:45	0	0	0	0	0	0	0	1	0	0	0	0	0	0	0	0	1	0	1
Total	0	0	0	0	0	0	0	1	0	0	0	2	0	0	0	0	3	0	3
*** BREAK ***																			
14:15	0	0	0	0	0	0	0	0	0	0	0	1	0	0	0	0	1	0	1
14:30	0	0	0	1	0	0	0	2	0	0	0	1	0	0	0	2	6	0	6
14:45	0	0	0	0	0	0	0	2	0	0	0	0	0	0	0	0	2	0	2
Total	0	0	0	1	0	0	0	4	0	0	0	2	0	0	0	2	9	0	9
Grand Total	0	0	0	1	0	0	0	5	0	0	0	4	0	0	0	2	12	0	12
Apprch %	0	0	0		0	0	0		0	0	0		0	0	0				
Total %																	100	0	

(05)

McMahon Associates, Inc.

Transportation Engineers and Planners

425 Commerce Drive, Suite 200
Fort Washington, PA 19034

Municipality: Annapolis
Location: Forest Drive &
Youngs Farm Road / School Exit
Counter/Countboard No.: TD

File Name : annapolis04wr
Site Code : 11061104
Start Date : 2/3/2011
Page No : 1

Groups Printed- Unshifted

	Forest Drive Southbound					Youngs Farm Rd Westbound					Forest Drive Northbound					School Exit Only Eastbound							
Start Time	Left	Thru	ROR	Right	HV	Left	Thru	ROR	Right	HV	Left	Thru	ROR	Right	HV	Left	Thru	ROR	Right	HV	Int. Total	Int. Total	Int. Total
06:00	0	43	0	0	6	0	0	2	2	0	0	218	0	0	7	0	0	0	0	0	13	265	278
06:15	1	60	0	0	18	1	0	1	3	0	0	218	0	1	2	0	0	0	0	0	20	285	305
06:30	0	65	0	0	7	1	0	4	2	0	0	284	0	0	8	0	0	1	0	1	16	357	373
06:45	0	124	0	0	7	2	0	1	0	1	0	384	0	0	9	0	0	1	0	0	16	512	528
Total	1	292	0	0	38	4	0	8	7	1	0	1104	0	1	25	0	0	2	0	1	65	1419	1484
07:00	4	124	0	0	10	1	0	6	0	0	0	437	0	3	1	0	0	0	0	0	11	575	586
07:15	0	171	0	0	7	1	0	5	3	0	0	418	0	0	6	0	0	0	1	1	14	599	613
07:30	2	232	0	0	22	1	0	3	4	0	0	449	0	1	7	0	0	0	0	0	29	692	721
07:45	0	312	0	0	11	2	0	2	0	0	0	481	0	1	9	6	1	1	1	8	28	807	835
Total	6	839	0	0	50	5	0	16	7	0	0	1785	0	5	23	6	1	1	2	9	82	2673	2755
08:00	0	464	0	0	11	2	0	3	3	0	0	484	0	4	6	3	0	2	0	2	19	965	984
08:15	0	272	0	0	14	4	0	4	1	0	0	562	0	3	5	1	0	0	0	0	19	847	866
08:30	1	230	0	0	15	3	0	6	1	0	0	452	0	0	8	1	0	0	0	0	23	696	719
08:45	0	243	0	0	12	2	0	5	1	0	0	413	0	1	17	0	0	1	0	0	29	666	695
Total	1	1209	0	0	52	11	0	20	6	0	0	1911	0	8	36	5	0	3	0	2	90	3174	3264
					51					0					28					10			
*** BREAK ***																							
15:00	5	401	0	0	5	3	0	2	0	0	0	235	0	3	8	9	5	0	4	18	31	667	698
15:15	5	426	0	0	7	4	0	4	4	0	0	303	0	2	8	0	0	0	0	0	15	748	763
15:30	8	428	0	0	8	2	0	2	1	0	0	328	0	5	9	1	0	0	0	0	17	775	792
15:45	8	377	0	0	6	4	0	1	0	0	0	312	0	1	9	1	0	1	0	0	15	705	720
Total	26	1632	0	0	26	13	0	9	5	0	0	1178	0	11	34	11	5	1	4	18	78	2895	2973
16:00	8	406	0	0	6	1	0	6	2	0	0	266	0	1	9	3	0	1	3	5	20	717	737
16:15	5	440	0	0	6	1	0	2	0	0	0	251	0	4	7	0	0	1	0	0	13	704	717
16:30	3	402	0	0	5	9	0	1	2	0	0	279	0	8	8	0	0	0	0	1	14	704	718
16:45	8	412	0	0	3	2	0	3	0	0	0	347	0	7	12	0	0	0	0	0	15	779	794
Total	24	1660	0	0	20	13	0	12	4	0	0	1163	0	20	36	3	0	2	3	6	62	2904	2966
17:00	1	440	0	0	3	3	0	5	0	0	0	323	0	4	1	0	0	0	0	0	4	776	780
17:15	4	455	0	0	0	4	0	2	1	0	0	334	0	7	4	1	0	1	0	0	4	809	813
17:30	9	442	0	0	2	0	0	4	4	0	0	313	0	5	2	0	0	0	0	1	5	777	782
17:45	4	444	0	0	1	2	0	4	1	0	0	263	0	2	4	0	0	0	0	0	5	720	725
Total	18	1781	0	0	6	9	0	15	6	0	0	1233	0	18	11	1	0	1	0	1	18	3082	3100
Grand Total	76	7413	0	0	192	55	0	80	35	1	0	8374	0	63	165	26	6	10	9	37	395	16147	16542
Apprch %	1	99	0	0		32.4	0	47.1	20.6		0	99.3	0	0.7		51	11.8	19.6	17.6				
Total %	0.5	45.9	0	0		0.3	0	0.5	0.2		0	51.9	0	0.4		0.2	0	0.1	0.1		2.4	97.6	
					8					0					19					1			

McMahon Associates, Inc.

Transportation Engineers and Planners

425 Commerce Drive, Suite 200
Fort Washington, PA 19034

Municipality: Annapolis
Location: Forest Drive &
Youngs Farm Road / School Exit
Counter/Countboard No.: TD

File Name : annapolis04wr
Site Code : 11061104
Start Date : 2/3/2011
Page No : 2

	Forest Drive Southbound					Youngs Farm Rd Westbound					Forest Drive Northbound					School Exit Only Eastbound					
Start Time	Left	Thru	ROR	Right	App. Total	Left	Thru	ROR	Right	App. Total	Left	Thru	ROR	Right	App. Total	Left	Thru	ROR	Right	App. Total	Int. Total
Peak Hour Analysis From 06:00 to 11:45 - Peak 1 of 1																					
Peak Hour for Entire Intersection Begins at 07:45																					
07:45	0	312	0	0	312	2	0	2	0	4	0	481	0	1	482	6	1	1	1	9	807
08:00	0	464	0	0	464	2	0	3	3	8	0	484	0	4	488	3	0	2	0	5	965
08:15	0	272	0	0	272	4	0	4	1	9	0	562	0	3	565	1	0	0	0	1	847
08:30	1	230	0	0	231	3	0	8	1	12	0	452	0	0	452	1	0	0	0	1	696
Total Volume	1	1278	0	0	1279	11	0	17	5	33	0	1979	0	8	1987	11	1	3	1	16	3315
% App. Total	0.1	99.9	0	0		33.3	0	51.5	15.2		0	99.6	0	0.4		68.8	6.2	18.8	6.2		
PHF	.250	.689	.000	.000	.689	.688	.000	.531	.417	.688	.000	.880	.000	.500	.879	.458	.250	.375	.250	.444	.859
					4%			0.61		8%					1%			0.50		63%	

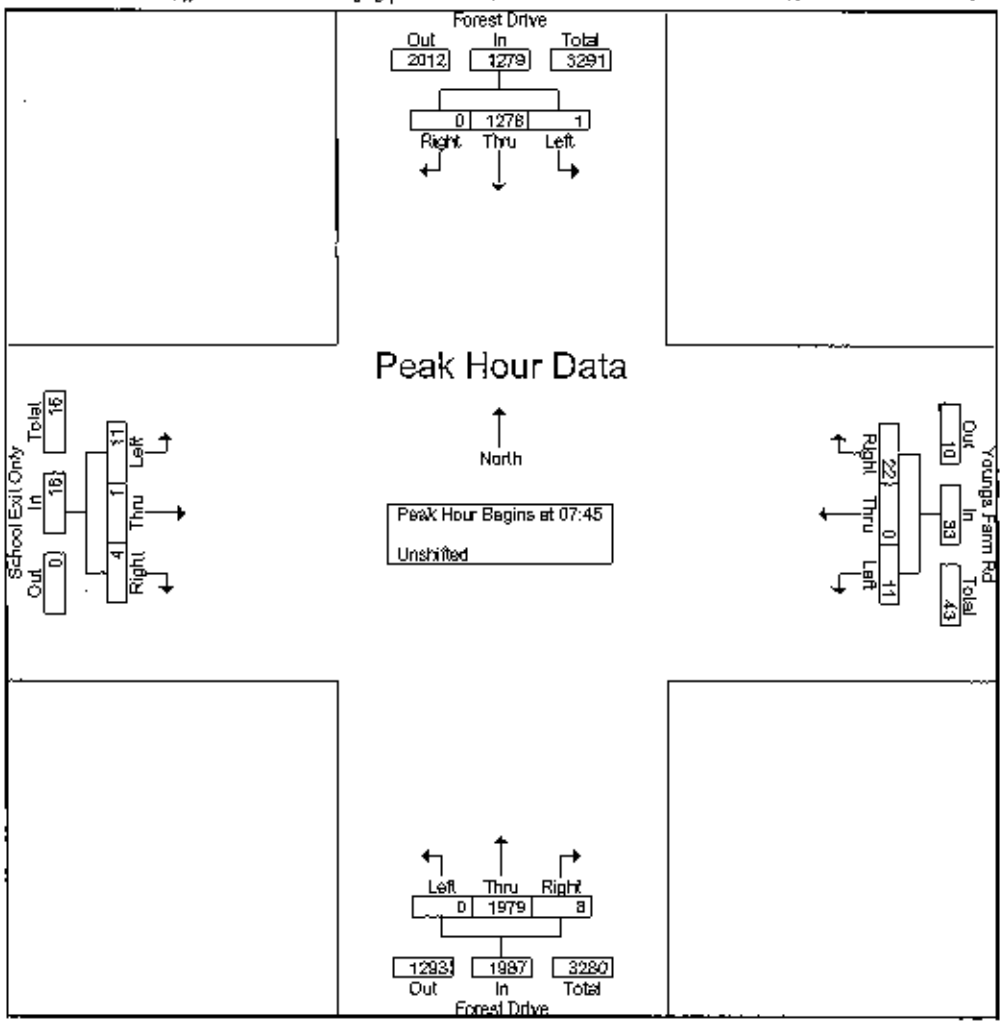

McMahon Associates, Inc.

Transportation Engineers and Planners
425 Commerce Drive, Suite 200
Fort Washington, PA 19034

Municipality: Annapolis
Location: Forest Drive &
Youngs Farm Road / School Exit
Counter/Countboard No.: TD

File Name : annapolis04wr
Site Code : 11061104
Start Date : 2/3/2011
Page No : 3

	Forest Drive Southbound					Youngs Farm Rd Westbound					Forest Drive Northbound					School Exit Only Eastbound					
Start Time	Left	Thru	ROR	Right	App. Total	Left	Thru	ROR	Right	App. Total	Left	Thru	ROR	Right	App. Total	Left	Thru	ROR	Right	App. Total	Int. Total
Peak Hour Analysis From 12:00 to 17:45 - Peak 1 of 1																					
Peak Hour for Entire Intersection Begins at 16:45																					
16:45	8	412	0	0	420	2	0	3	0	5	0	347	0	7	354	0	0	0	0	0	779
17:00	1	440	0	0	441	3	0	5	0	8	0	323	0	4	327	0	0	0	0	0	776
17:15	4	455	0	0	459	4	0	2	1	7	0	334	0	7	341	1	0	1	0	2	809
17:30	9	442	0	0	451	0	0	4	4	8	0	313	0	5	318	0	0	0	0	0	777
Total Volume	22	1749	0	0	1771	9	0	14	5	28	0	1317	0	23	1340	1	0	1	0	2	3141
% App. Total	1.2	98.8	0	0		32.1	0	50	17.9		0	98.3	0	1.7		50	0	50	0		
PHF	.611	.961	.000	.000	.966	.563	.000	.700	.313	.875	.000	.949	.000	.821	.946	.250	.000	.250	.000	.250	.971
	0%							0.59		0%					1%					50%	

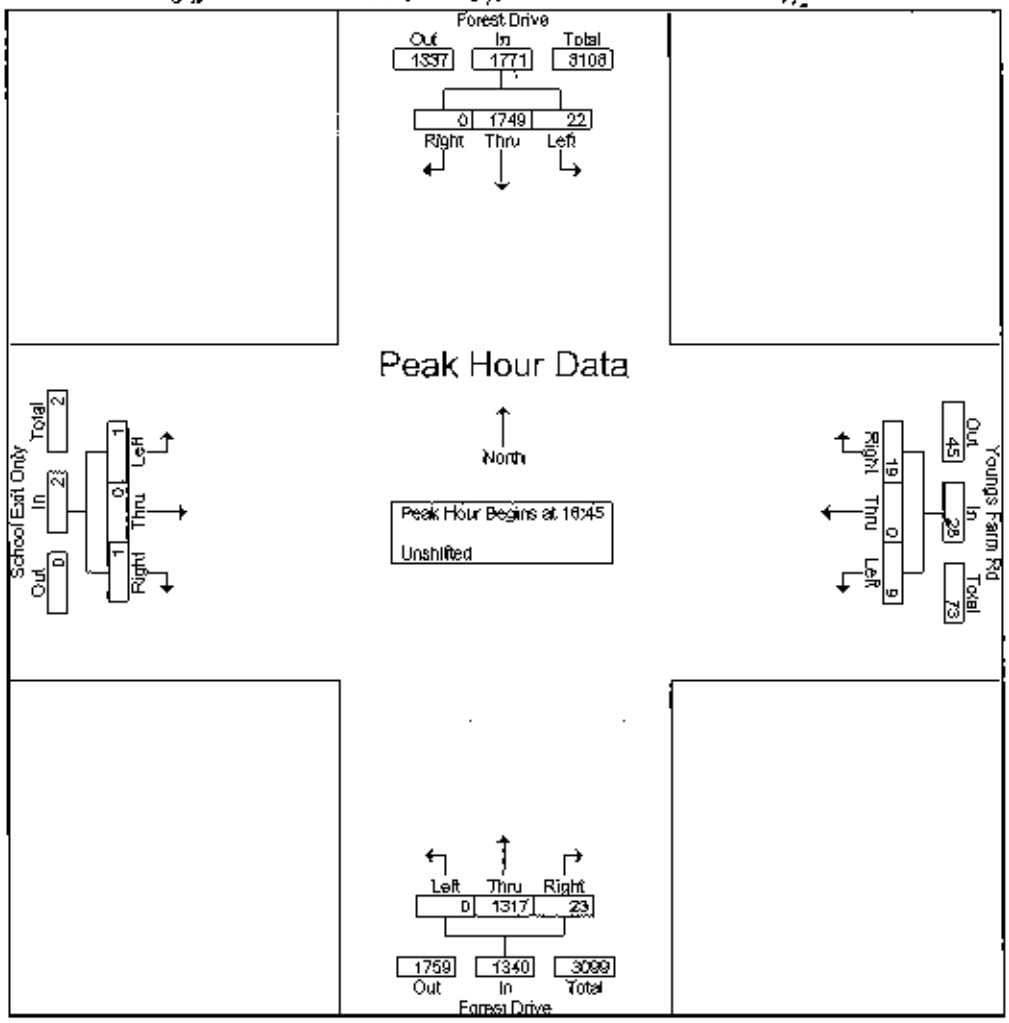

McMahon Associates, Inc.

Transportation Engineers and Planners
425 Commerce Drive, Suite 200
Fort Washington, PA 19034

Municipality: Annapolis
Location: Forest Drive &
Youngs Farm Road / School Exit
Counter/Countboard No.: TD

File Name : annapolis04wr
Site Code : 11061104
Start Date : 2/3/2011
Page No : 1

Groups Printed- Pedestrians

	Forest Drive Southbound				Youngs Farm Rd Westbound				Forest Drive Northbound				School Exit Only Eastbound						
Start Time	Left	Thru	Right	SW Peds	Left	Thru	Right	NB Peds	Left	Thru	Right	SW Peds	Left	Thru	Right	NB Peds	Bnds. Total	Inclu. Total	Int. Total
*** BREAK ***																			
07:00	0	0	0	1	0	0	0	1	0	0	0	0	0	0	0	0	2	0	2
*** BREAK ***																			
07:30	0	0	0	0	0	0	0	0	0	0	0	0	0	0	0	1	1	0	1
07:45	0	0	0	1	0	0	0	0	0	0	0	0	0	0	0	0	1	0	1
Total	0	0	0	2	0	0	0	1	0	0	0	0	0	0	0	1	4	0	4
08:00	0	0	0	0	0	0	0	1	0	0	0	0	0	0	0	0	1	0	1
*** BREAK ***																			
Total	0	0	0	0	0	0	0	1	0	0	0	0	0	0	0	0	1	0	1
*** BREAK ***																			
15:45	0	0	0	1	0	0	0	0	0	0	0	0	0	0	0	2	3	0	3
Total	0	0	0	1	0	0	0	0	0	0	0	0	0	0	0	2	3	0	3
16:00	0	0	0	0	0	0	0	1	0	0	0	0	0	0	0	0	1	0	1
16:15	0	0	0	0	0	0	0	0	0	0	0	1	0	0	0	0	1	0	1
*** BREAK ***																			
16:45	0	0	0	0	0	0	0	2	0	0	0	0	0	0	0	0	2	0	2
Total	0	0	0	0	0	0	0	3	0	0	0	1	0	0	0	0	4	0	4
17:00	0	0	0	0	0	0	0	0	0	0	0	0	0	0	0	1	1	0	1
17:15	0	0	0	1	0	0	0	2	0	0	0	1	0	0	0	0	4	0	4
*** BREAK ***																			
17:45	0	0	0	0	0	0	0	0	0	0	0	0	0	0	0	2	2	0	2
Total	0	0	0	1	0	0	0	2	0	0	0	1	0	0	0	3	7	0	7
Grand Total	0	0	0	4	0	0	0	7	0	0	0	2	0	0	0	6	19	0	19
Apprch %	0	0	0		0	0	0		0	0	0		0	0	0				
Total %																	100	0	

McMahon Associates, Inc.

Transportation Engineers and Planners

425 Commerce Drive, Suite 200
Fort Washington, PA 19034

Municipality: Annapolis
Location: Forest Drive &
Youngs Farm Road / School Exit
Counter/Countboard No.:

File Name : annapolis04s
Site Code : 11061604
Start Date : 1/29/2011
Page No : 1

Groups Printed- Unshifted

	Forest Drive Southbound				Youngs Farm Rd Westbound				Forest Drive Northbound				School Exit Only Eastbound						
Start Time	Left	Thru	Right	HV	Left	Thru	Right	HV	Left	Thru	Right	HV	Left	Thru	Right	HV	Exclu. Total	Incl. Total	Inc. Total
12:00	3	281	0	3	1	0	1	1	0	318	2	3	0	0	0	0	7	606	613
12:15	2	295	0	3	3	0	1	0	0	352	8	4	0	0	0	0	7	661	668
12:30	9	329	0	4	1	0	3	0	0	315	0	5	0	0	0	0	9	657	666
12:45	2	338	0	2	4	0	0	0	0	350	1	5	0	0	0	0	7	695	702
Total	16	1243	0	12	9	0	5	1	0	1335	11	17	0	0	0	0	30	2619	2649
13:00	5	318	0	2	2	0	5	1	0	316	4	0	0	0	0	0	3	650	653
13:15	7	287	0	1	4	0	2	0	0	269	47	5	0	1	0	0	6	617	623
13:30	5	313	0	0	2	0	0	0	0	320	1	0	0	0	0	0	0	641	641
13:45	1	267	0	1	1	0	1	0	0	294	1	4	0	0	0	0	5	565	570
Total	18	1185	0	4	9	0	8	1	0	1199	53	9	0	1	0	0	14	2473	2487
14:00	4	318	0	2	2	0	0	0	0	309	4	0	0	0	0	0	2	637	639
14:15	3	317	0	2	2	0	0	0	0	297	5	4	0	0	0	0	6	624	630
14:30	5	386	0	2	0	0	1	0	0	301	2	1	0	0	0	0	3	695	698
14:45	5	330	0	3	2	0	1	0	0	314	2	0	0	0	0	0	3	654	657
Total	17	1351	0	9	6	0	2	0	0	1221	13	5	0	0	0	0	14	2610	2624
Grand Total	51	3779	0	25	24	0	15	2	0	3755	77	31	0	1	0	0	58	7702	7760
Apprch %	1.3	98.7	0		61.5	0	38.5		0	98	2		0	100	0				
Total %	0.7	49.1	0		0.3	0	0.2		0	48.8	1		0	0	0		0.7	99.3	
			0				1				14				0				

McMahon Associates, Inc.

Transportation Engineers and Planners

425 Commerce Drive, Suite 200
Fort Washington, PA 19034

Municipality: Annapolis
Location: Forest Drive &
Youngs Farm Road / School Exit
Counter/Countboard No.:

File Name : annapolis04s
Site Code : 11061604
Start Date : 1/29/2011
Page No : 2

	Forest Drive Southbound				Youngs Farm Rd Westbound				Forest Drive Northbound				School Exit Only Eastbound				
Start Time	Left	Thru	Right	App. Total	Left	Thru	Right	App. Total	Left	Thru	Right	App. Total	Left	Thru	Right	App. Total	Int. Total
Peak Hour Analysis From 12:00 to 14:45 - Peak 1 of 1																	
Peak Hour for Entire Intersection Begins at 12:15																	
12:15	2	295	0	297	3	0	1	4	0	352	8	360	0	0	0	0	661
12:30	9	329	0	338	1	0	3	4	0	315	0	315	0	0	0	0	657
12:45	2	338	0	340	4	0	0	4	0	350	1	351	0	0	0	0	695
13:00	5	318	0	323	2	0	5	7	0	316	4	320	0	0	0	0	650
Total Volume	18	1280	0	1298	10	0	9	19	0	1333	13	1346	0	0	0	0	2663
% App. Total	1.4	98.6	0		52.6	0	47.4		0	99	1		0	0	0		
PHF	.500	.947	.000	.954	.625	.000	.450	.679	.000	.947	.406	.935	.000	.000	.000	.000	.958

1% 5% 1% 0%

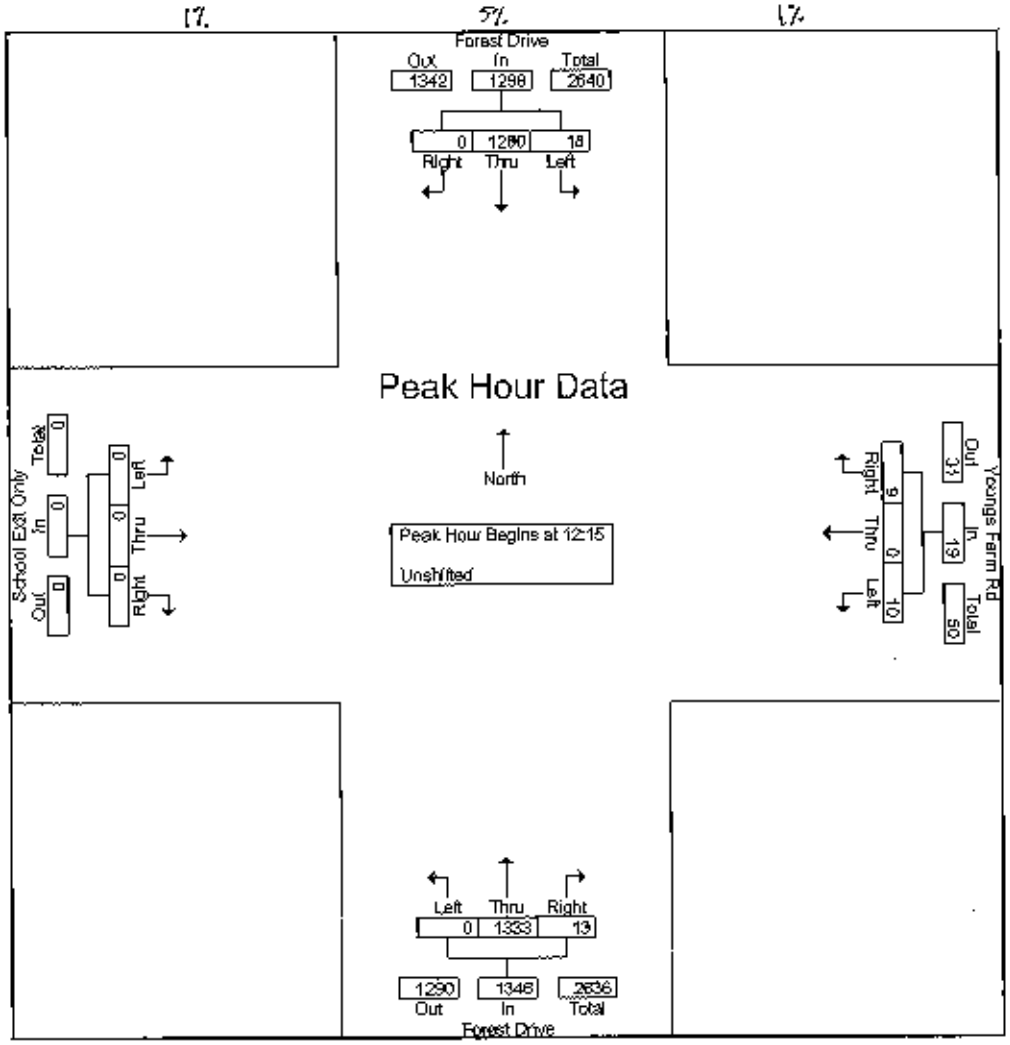

McMahon Associates, Inc.

Transportation Engineers and Planners

425 Commerce Drive, Suite 200
Fort Washington, PA 19034

Municipality: Annapolis
Location: Forest Drive &
Youngs Farm Road / School Exit
Counter/Countboard No.:

File Name : annapolis04s
Site Code : 11061604
Start Date : 1/29/2011
Page No : 1

Groups Printed- Pedestrians

	Forest Drive Southbound				Youngs Farm Rd Westbound				Forest Drive Northbound				School Exit Only Eastbound						
Start Time	Left	Thru	Right	Div Peds	Left	Thru	Right	Div Peds	Left	Thru	Right	Div Peds	Left	Thru	Right	Div Peds	Div. Total	Indiv. Total	Int. Total
12:00	0	0	0	0	0	0	0	1	0	0	0	0	0	0	0	0	1	0	1
12:15	0	0	0	0	0	0	0	1	0	0	0	0	0	0	0	0	1	0	1
*** BREAK ***																			
Total	0	0	0	0	0	0	0	2	0	0	0	0	0	0	0	0	2	0	2
13:00	0	0	0	0	0	0	0	1	0	0	0	0	0	0	0	0	1	0	1
13:15	0	0	0	0	0	0	0	1	0	0	0	1	0	0	0	1	3	0	3
*** BREAK ***																			
Total	0	0	0	0	0	0	0	2	0	0	0	1	0	0	0	1	4	0	4
14:00	0	0	0	0	0	0	0	0	0	0	0	2	0	0	0	0	2	0	2
*** BREAK ***																			
14:30	0	0	0	0	0	0	0	1	0	0	0	0	0	0	0	0	1	0	1
*** BREAK ***																			
Total	0	0	0	0	0	0	0	1	0	0	0	2	0	0	0	0	3	0	3
Grand Total	0	0	0	0	0	0	0	5	0	0	0	3	0	0	0	1	9	0	9
Apprch %	0	0	0		0	0	0		0	0	0		0	0	0				
Total %																	100	0	

McMahon Associates, Inc.

Transportation Engineers and Planners
425 Commerce Drive, Suite 200
Fort Washington, PA 19034

Municipality: Annapolis
Location: Forest Drive & Tyler Avenue
Counter/Countboard No.: TD

File Name : annapolis03w
Site Code : 11061103
Start Date : 2/2/2011
Page No : 1

Groups Printed- Unshifted

	Forest Drive Southbound					Tyler Ave Westbound					Forest Drive Northbound					Tyler Ave Eastbound							
Start Time	Left	Thru	ROR	Right	HV	Left	Thru	ROR	Right	HV	Left	Thru	ROR	Right	HV	Left	Thru	ROR	Right	HV	Bkrs. Total	Inbs. Total	Int. Total
06:00	3	30	0	1	7	0	0	0	5	0	1	156	0	2	1	2	1	0	0	1	9	201	210
06:15	2	47	0	5	12	1	2	8	3	1	2	201	0	0	4	5	0	0	2	1	18	278	296
06:30	5	67	0	3	10	0	0	17	2	0	2	251	0	3	10	10	1	0	0	2	22	361	383
06:45	9	91	0	5	8	2	1	20	7	0	4	291	0	1	5	7	1	2	1	2	15	442	457
Total	19	235	0	14	37	3	3	45	17	1	9	899	0	6	20	24	3	2	3	6	64	1282	1346
07:00	11	108	0	6	10	0	3	25	1	0	2	355	0	2	2	5	2	0	1	0	12	521	533
07:15	15	130	1	3	7	3	1	15	4	1	2	398	0	1	4	8	2	0	2	2	14	585	599
07:30	18	181	0	4	11	2	2	26	6	2	2	398	0	4	5	9	0	3	0	2	20	655	675
07:45	16	242	0	6	17	2	2	32	17	1	3	406	0	6	13	6	2	2	1	1	32	743	775
Total	60	661	1	19	45	7	8	98	28	4	9	1557	0	13	24	28	6	5	4	5	78	2504	2582
08:00	33	398	0	3	11	7	4	28	13	0	3	413	0	0	6	5	0	0	0	1	18	907	925
08:15	32	293	0	16	12	7	5	21	6	2	1	458	0	5	6	10	2	3	2	2	22	861	883
08:30	18	243	0	8	7	1	1	27	4	0	4	433	1	6	3	16	2	3	5	1	11	772	783
08:45	14	192	2	5	10	3	3	20	7	0	6	370	0	4	9	6	3	5	2	2	21	642	663
Total	97	1126	2	32	40	18	13	96	30	2	14	1674	1	15	24	37	7	11	9	6	72	3182	3254
					47					3					18					5			
*** BREAK ***																							
15:00	25	334	0	12	10	6	2	31	10	0	11	251	0	7	6	11	1	1	1	1	17	703	720
15:15	30	439	0	16	13	9	0	26	6	0	6	301	0	9	4	11	3	1	4	1	18	861	879
15:30	27	332	0	6	9	6	2	15	8	0	11	392	2	6	7	7	3	2	2	3	19	821	840
15:45	27	336	0	13	1	4	3	15	4	0	11	262	1	9	9	16	4	1	0	2	12	706	718
Total	109	1441	0	47	33	25	7	87	28	0	39	1206	3	31	26	45	11	5	7	7	66	3091	3157
16:00	25	337	1	15	9	4	2	16	2	0	3	272	0	1	7	9	3	5	1	1	17	696	713
16:15	29	363	0	14	8	5	3	15	1	0	3	266	0	7	9	14	6	0	3	2	19	729	748
16:30	26	381	0	8	9	6	4	15	7	0	6	280	1	5	4	11	4	2	1	1	14	757	771
16:45	28	395	1	20	4	8	0	17	1	0	4	293	0	3	6	15	2	1	1	3	13	789	802
Total	108	1476	2	57	30	23	9	63	11	0	16	1111	1	16	26	49	15	8	6	7	63	2971	3034
17:00	29	399	0	18	4	12	2	17	8	1	4	276	1	5	4	13	4	1	3	2	11	792	803
17:15	34	375	0	12	5	9	9	15	8	1	4	305	1	9	4	11	5	1	1	0	10	799	809
17:30	17	368	0	12	5	6	7	16	7	0	4	272	0	7	3	17	1	3	0	1	9	737	746
17:45	29	346	0	11	3	5	3	13	6	0	7	243	0	4	1	13	4	0	2	2	6	686	692
Total	109	1488	0	53	17	32	21	61	29	2	19	1096	2	25	12	54	14	5	6	5	36	3014	3050
Grand Total	502	6427	5	222	202	108	61	450	143	9	106	7543	7	106	132	237	56	36	35	36	379	16044	16423
Apprch %	7	89.6	0.1	3.1		14.2	8	59.1	18.8		1.4	97.2	0.1	1.4		65.1	15.4	9.9	9.6				
Total %	3.1	40.1	0	1.4		0.7	0.4	2.8	0.9		0.7	47	0	0.7		1.5	0.3	0.2	0.2		2.3	97.7	
					22					2					18					6			

McMahon Associates, Inc.

Transportation Engineers and Planners
425 Commerce Drive, Suite 200
Fort Washington, PA 19034

Municipality: Annapolis
Location: Forest Drive &
Tyler Avenue
Counter/Countboard No.: TD

File Name : annapolis03w
Site Code : 11061103
Start Date : 2/2/2011
Page No : 2

	Forest Drive Southbound					Tyler Ave Westbound					Forest Drive Northbound					Tyler Ave Eastbound					
Start Time	Left	Thru	ROR	Right	App. Total	Left	Thru	ROR	Right	App. Total	Left	Thru	ROR	Right	App. Total	Left	Thru	ROR	Right	App. Total	Int. Total
Peak Hour Analysis From 06:00 to 11:45 - Peak 1 of 1																					
Peak Hour for Entire Intersection Begins at 07:45																					
07:45	16	242	0	6	264	2	2	32	17	53	3	406	0	6	415	6	2	2	1	11	743
08:00	33	398	0	3	434	7	4	28	13	52	3	413	0	0	416	5	0	0	0	5	907
08:15	32	293	0	16	341	7	5	21	6	39	1	458	0	5	464	10	2	3	2	17	861
08:30	18	243	0	8	269	1	1	27	4	33	4	433	1	6	444	16	2	3	5	26	772
Total Volume	99	1176	0	33	1308	17	12	108	40	177	11	1710	1	17	1739	37	6	8	8	59	3283
% App. Total	7.6	89.9	0	2.5		9.6	6.8	61	22.6		0.6	98.3	0.1	1		62.7	10.2	13.6	13.6		
PHF	.750	.739	.000	.516	.753	.607	.600	.844	.586	.835	.688	.933	.250	.708	.937	.578	.750	.667	.400	.567	.905
					4%			0.76		2%			0.64		2%			0.50		8%	

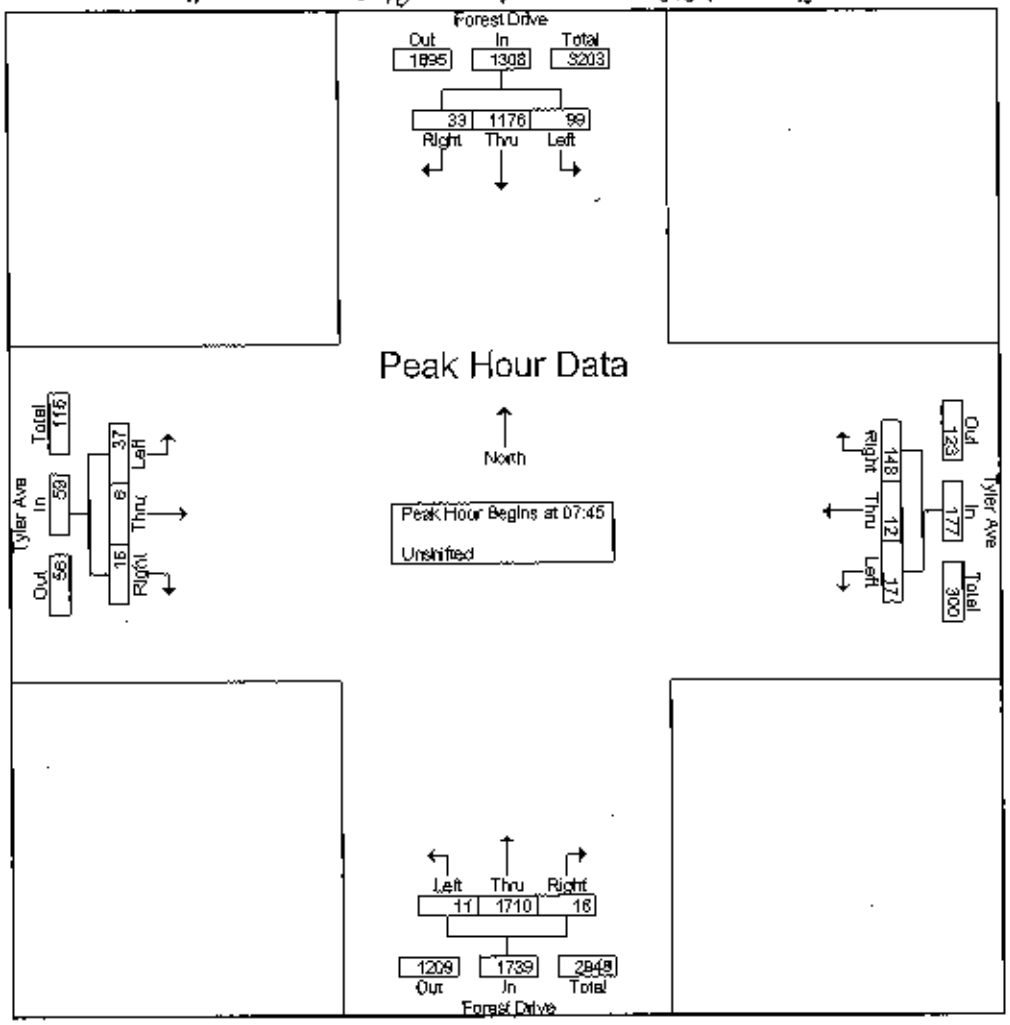

McMahon Associates, Inc.

Transportation Engineers and Planners

425 Commerce Drive, Suite 200
Fort Washington, PA 19034

Municipality: Annapolis
Location: Forest Drive & Tyler Avenue
Counter/Countboard No.: TD

File Name : annapolis03w
Site Code : 11061103
Start Date : 2/2/2011
Page No : 3

	Forest Drive Southbound					Tyler Ave Westbound					Forest Drive Northbound					Tyler Ave Eastbound					
Start Time	Left	Thru	ROR	Right	App. Total	Left	Thru	ROR	Right	App. Total	Left	Thru	ROR	Right	App. Total	Left	Thru	ROR	Right	App. Total	Int. Total
Peak Hour Analysis From 12:00 to 17:45 - Peak 1 of 1																					
Peak Hour for Entire Intersection Begins at 16:30																					
16:30	26	381	0	8	415	6	4	15	7	32	6	280	1	5	292	11	4	2	1	18	757
16:45	28	395	1	20	444	8	0	17	1	26	4	293	0	3	300	15	2	1	1	19	789
17:00	29	399	0	18	446	12	2	17	8	39	4	276	1	5	286	13	4	1	3	21	792
17:15	34	375	0	12	421	9	9	15	8	41	4	305	1	9	319	11	5	1	1	18	799
Total Volume	117	1550	1	58	1726	35	15	64	24	138	18	1154	3	22	1197	50	15	5	6	76	3137
% App. Total	6.8	89.8	0.1	3.4		25.4	10.9	46.4	17.4		1.5	96.4	0.3	1.8		65.8	19.7	6.6	7.9		
PHF	.860	.971	.250	.725	.967	.729	.417	.941	.750	.841	.750	.946	.750	.611	.938	.833	.750	.625	.500	.905	.982
			0.70	1%				0.88	1%				0.63	2%				0.69	8%		

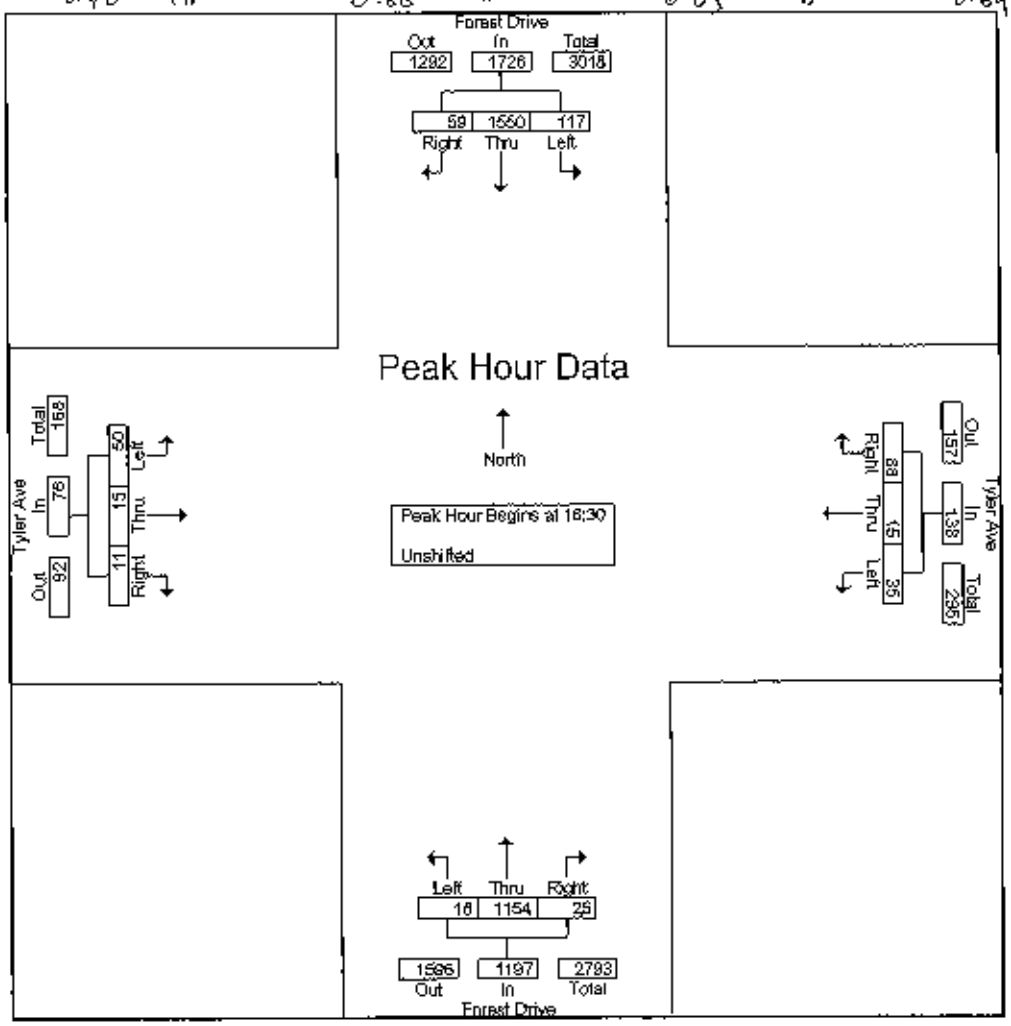

McMahon Associates, Inc.

Transportation Engineers and Planners

425 Commerce Drive, Suite 200
Fort Washington, PA 19034

Municipality: Annapolis
Location: Forest Drive &
Tyler Avenue
Counter/Countboard No.: TD

File Name : annapolis03w
Site Code : 11061103
Start Date : 2/2/2011
Page No : 1

Groups Printed- Pedestrians

	Forest Drive Southbound				Tyler Ave Westbound				Forest Drive Northbound				Tyler Ave Eastbound						
Start Time	Left	Thru	Right	SW Peds	Left	Thru	Right	NB Peds	Left	Thru	Right	SW Peds	Left	Thru	Right	NB Peds	Bkdn. Total	Indu. Total	Int. Total
*** BREAK ***																			
06:30	0	0	0	0	0	0	0	0	0	0	0	0	0	0	0	1	1	0	1
06:45	0	0	0	0	0	0	0	1	0	0	0	1	0	0	0	0	2	0	2
Total	0	0	0	0	0	0	0	1	0	0	0	1	0	0	0	1	3	0	3
07:00	0	0	0	1	0	0	0	0	0	0	0	0	0	0	0	0	1	0	1
*** BREAK ***																			
07:45	0	0	0	1	0	0	0	1	0	0	0	1	0	0	0	0	3	0	3
Total	0	0	0	2	0	0	0	1	0	0	0	1	0	0	0	0	4	0	4
*** BREAK ***																			
08:30	0	0	0	1	0	0	0	1	0	0	0	0	0	0	0	1	3	0	3
*** BREAK ***																			
Total	0	0	0	1	0	0	0	1	0	0	0	0	0	0	0	1	3	0	3
*** BREAK ***																			
16:00	0	0	0	0	0	0	0	0	0	0	0	2	0	0	0	0	2	0	2
16:15	0	0	0	1	0	0	0	0	0	0	0	0	0	0	0	1	2	0	2
16:30	0	0	0	0	0	0	0	1	0	0	0	0	0	0	0	0	1	0	1
16:45	0	0	0	0	0	0	0	1	0	0	0	1	0	0	0	0	2	0	2
Total	0	0	0	1	0	0	0	2	0	0	0	3	0	0	0	1	7	0	7
17:00	0	0	0	0	0	0	0	0	0	0	0	0	0	0	0	2	2	0	2
*** BREAK ***																			
17:30	0	0	0	0	0	0	0	2	0	0	0	2	0	0	0	0	4	0	4
17:45	0	0	0	0	0	0	0	0	0	0	0	0	0	0	0	2	2	0	2
Total	0	0	0	0	0	0	0	2	0	0	0	2	0	0	0	4	8	0	8
Grand Total	0	0	0	4	0	0	0	7	0	0	0	7	0	0	0	7	25	0	25
Apprch %	0	0	0		0	0	0		0	0	0		0	0	0				
Total %																	100	0	

McMahon Associates, Inc.

Transportation Engineers and Planners

425 Commerce Drive, Suite 200
Fort Washington, PA 19034

Municipality: Annapolis
Location: Forest Drive &
Tyler Avenue
Counter/Countboard No.: LB

File Name : annapolis03s
Site Code : 11061603
Start Date : 1/29/2011
Page No : 1

Groups Printed- Unshifted

	Forest Drive Southbound					Tyler Avenue Westbound					Forest Drive Northbound					Tyler Avenue Eastbound							
Start Time	Left	Thru	ROR	Right	HV	Left	Thru	ROR	Right	HV	Left	Thru	ROR	Right	HV	Left	Thru	ROR	Right	HV	Int. Total	Int. Total	Int. Total
12:00	24	259	0	14	3	5	3	0	16	1	4	282	0	11	2	9	2	2	2	2	8	633	641
12:15	24	227	0	6	3	10	1	0	35	0	5	260	0	3	3	15	3	0	3	1	7	592	599
12:30	15	278	0	15	2	1	5	0	20	1	2	302	0	11	4	15	4	1	3	1	8	672	680
12:45	21	283	0	14	3	11	3	0	11	0	1	249	0	3	3	14	3	0	1	0	6	614	620
Total	84	1047	0	49	11	27	12	0	82	2	12	1093	0	28	12	53	12	3	9	4	29	2511	2540
13:00	18	267	0	9	1	6	1	0	13	0	6	282	0	5	3	13	0	0	1	1	5	621	626
13:15	17	244	0	14	1	6	2	0	16	0	2	221	0	5	1	9	2	2	1	1	3	541	544
13:30	19	245	0	12	1	11	4	0	22	0	5	235	0	7	4	10	5	2	0	0	5	577	582
13:45	20	204	0	8	1	6	0	0	25	0	4	231	0	7	1	8	0	2	1	2	4	516	520
Total	74	960	0	43	4	29	7	0	76	0	17	969	0	24	9	40	7	6	3	4	17	2255	2272
14:00	19	240	0	12	1	9	1	0	9	0	4	275	0	10	2	7	0	3	0	0	3	589	592
14:15	11	238	0	12	2	4	0	0	12	0	3	207	0	6	4	10	1	0	1	0	6	505	511
14:30	16	256	0	4	1	3	0	0	5	0	5	221	0	1	2	8	1	1	1	2	5	522	527
14:45	19	262	0	17	1	5	4	0	14	0	6	256	0	1	0	21	4	1	3	0	1	613	614
Total	65	996	0	45	5	21	5	0	40	0	18	959	0	18	8	46	6	5	5	2	15	2229	2244
Grand Total	223	3003	0	137	20	77	24	0	198	2	47	3021	0	70	29	139	25	14	17	10	61	6995	7056
Apprch %	6.6	89.3	0	4.1		25.6	8	0	66.2		1.5	96.3	0	2.2		71.3	12.8	7.2	8.7				
Total %	3.2	42.9	0	2		1.1	0.3	0	2.8		0.7	43.2	0	1		2	0.4	0.2	0.2		0.9	99.1	

McMahon Associates, Inc.

Transportation Engineers and Planners

425 Commerce Drive, Suite 200
Fort Washington, PA 19034

Municipality: Annapolis
Location: Forest Drive &
Tyler Avenue
Counter/Countboard No.: LB

File Name : annapolis03s
Site Code : 11061603
Start Date : 1/29/2011
Page No : 2

	Forest Drive Southbound					Tyler Avenue Westbound					Forest Drive Northbound					Tyler Avenue Eastbound					
Start Time	Left	Thru	ROR	Right	App. Total	Left	Thru	ROR	Right	App. Total	Left	Thru	ROR	Right	App. Total	Left	Thru	ROR	Right	App. Total	Int. Total
Peak Hour Analysis From 12:00 to 14:45 - Peak 1 of 1																					
Peak Hour for Entire Intersection Begins at 12:00																					
12:00	24	259	0	14	297	5	3	0	16	24	4	282	0	11	297	9	2	2	2	15	633
12:15	24	227	0	6	257	10	1	0	35	46	5	260	0	3	268	15	3	0	3	21	592
12:30	15	278	0	15	308	1	5	0	20	26	2	302	0	11	315	15	4	1	3	23	672
12:45	21	283	0	14	318	11	3	0	11	25	1	249	0	3	253	14	3	0	1	18	614
Total Volume	84	1047	0	49	1180	27	12	0	82	121	12	1093	0	28	1133	53	12	3	9	77	2511
% App. Total	7.1	88.7	0	4.2		22.3	9.9	0	67.8		1.1	96.5	0	2.5		68.8	15.6	3.9	11.7		
PHF	.875	.925	.000	.817	.928	.614	.600	.000	.586	.858	.600	.905	.000	.636	.899	.883	.750	.375	.750	.837	.934
	1%						2%				1%							0.75		5%	

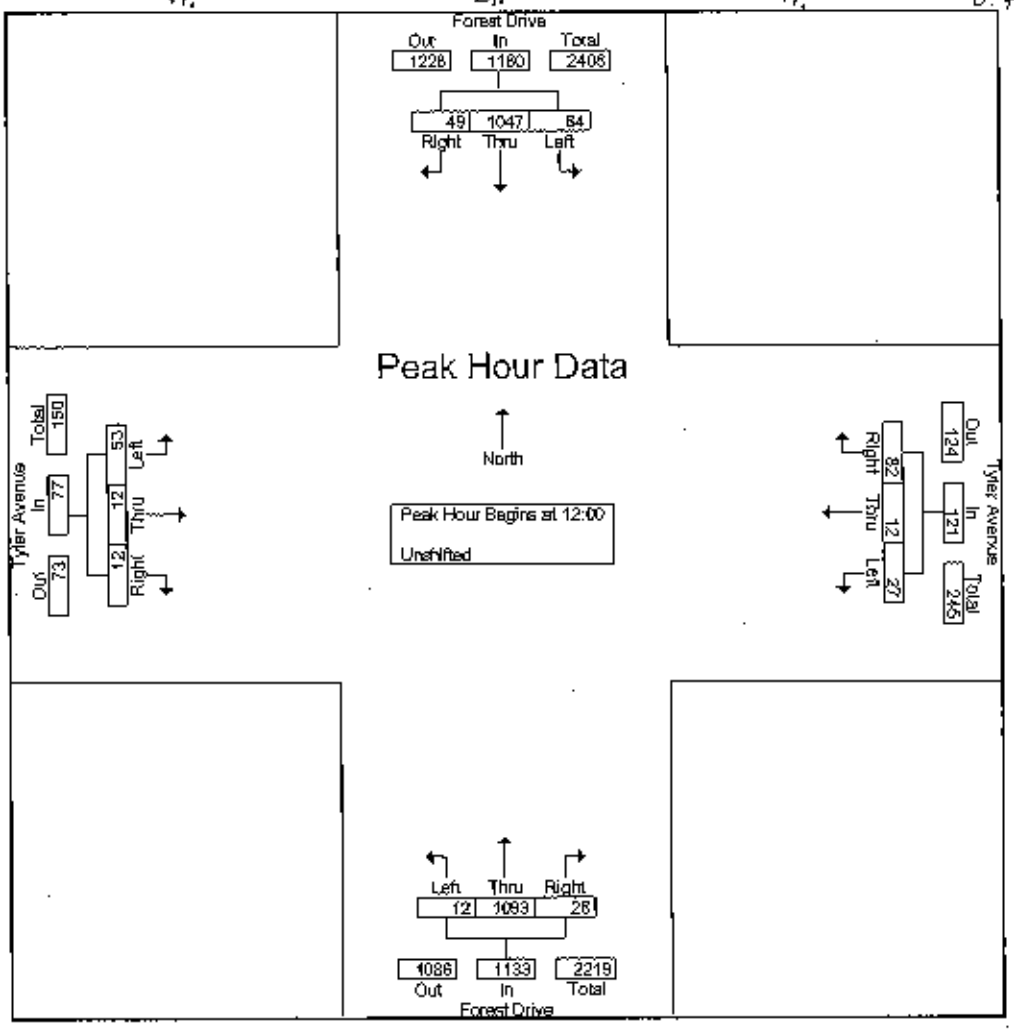

McMahon Associates, Inc.

Transportation Engineers and Planners

425 Commerce Drive, Suite 200
Fort Washington, PA 19034

Municipality: Annapolis
Location: Forest Drive &
Tyler Avenue
Counter/Countboard No.: LB

File Name : annapolis03s
Site Code : 11061603
Start Date : 1/29/2011
Page No : 1

Groups Printed- Pedestrians

	Forest Drive Southbound				Tyler Avenue Westbound				Forest Drive Northbound				Tyler Avenue Eastbound						
Start Time	Left	Thru	Right	E/W Peds	Left	Thru	Right	N/S Peds	Left	Thru	Right	E/W Peds	Left	Thru	Right	N/S Peds	Ends. Total	Indiv. Total	Int. Total
12:00	0	0	0	0	0	0	0	0	0	0	0	2	0	0	0	1	3	0	3
12:15	0	0	0	2	0	0	0	0	0	0	0	2	0	0	0	2	6	0	6
*** BREAK ***																			
12:45	0	0	0	2	0	0	0	0	0	0	0	0	0	0	0	0	2	0	2
Total	0	0	0	4	0	0	0	0	0	0	0	4	0	0	0	3	11	0	11
*** BREAK ***																			
13:15	0	0	0	1	0	0	0	2	0	0	0	3	0	0	0	2	8	0	8
*** BREAK ***																			
Total	0	0	0	1	0	0	0	2	0	0	0	3	0	0	0	2	8	0	8
14:00	0	0	0	0	0	0	0	1	0	0	0	0	0	0	0	0	1	0	1
*** BREAK ***																			
14:45	0	0	0	0	0	0	0	2	0	0	0	2	0	0	0	0	4	0	4
Total	0	0	0	0	0	0	0	3	0	0	0	2	0	0	0	0	5	0	5
Grand Total	0	0	0	5	0	0	0	5	0	0	0	9	0	0	0	5	24	0	24
Apprch %	0	0	0		0	0	0		0	0	0		0	0	0				
Total %																	100	0	

(7)

McMahon Associates, Inc.

Transportation Engineers and Planners

425 Commerce Drive, Suite 200
Fort Washington, PA 19034

Municipality: Annapolis
Location: Forest Drive &
Annapolis Neck Road
Counter/Countboard No.: CH

File Name : annapolis02w
Site Code : 87654321
Start Date : 2/2/2011
Page No : 1

Groups Printed- Unshifted

	Forest Dr Southbound				Martha Court Westbound				Forest Dr Northbound				Annapolis Neck Rd Eastbound						
Start Time	Left	Thru	Right	HV	Left	Thru	Right	HV	Left	Thru	Right	HV	Left	Thru	Right	HV	Ext. Total	Int. Total	Int. Total
07:00	1	81	0	8	0	0	2	0	0	313	0	2	0	0	0	0	10	397	407
07:15	2	103	1	2	1	0	7	0	0	361	0	4	1	0	0	0	6	476	482
07:30	3	161	0	5	1	0	6	0	0	359	0	4	0	0	0	0	9	530	539
07:45	3	225	1	13	0	0	10	0	0	349	3	13	2	0	0	0	26	593	619
Total	9	570	2	28	2	0	25	0	0	1382	3	23	3	0	0	0	51	1996	2047
08:00	2	358	3	4	0	0	10	0	0	375	1	2	1	0	0	0	6	750	756
08:15	3	247	1	5	0	0	6	0	0	411	1	6	2	0	0	0	11	671	682
08:30	3	236	2	9	0	0	6	0	0	370	5	3	1	0	2	1	13	625	638
08:45	2	166	0	4	0	0	2	0	2	286	1	7	0	0	1	0	11	460	471
Total	10	1007	6	22	0	0	24	0	2	1442	8	18	4	0	3	1	41	2506	2547
				31				0				24				1			
*** BREAK ***																			
15:45	2	300	3	2	0	0	3	0	0	215	1	4	1	0	0	0	6	525	531
Total	2	300	3	2	0	0	3	0	0	215	1	4	1	0	0	0	6	525	531
16:00	2	276	2	4	0	0	3	0	0	237	0	9	1	0	0	0	13	521	534
16:15	4	248	1	4	0	0	6	0	0	198	2	6	0	0	0	0	10	459	469
16:30	6	348	1	3	0	0	5	0	0	267	1	6	1	0	0	0	9	629	638
16:45	1	342	3	5	0	0	5	0	0	275	1	5	0	0	0	0	10	627	637
Total	13	1214	7	16	0	0	19	0	0	977	4	26	2	0	0	0	42	2236	2278
17:00	5	348	1	2	0	0	4	0	0	268	1	0	0	0	2	0	2	629	631
17:15	10	322	0	2	1	0	6	0	1	270	3	2	1	0	0	0	4	614	618
17:30	6	316	2	4	0	0	2	0	0	206	2	2	1	0	0	0	6	534	540
17:45	4	285	0	2	0	0	4	0	0	227	0	0	1	0	1	0	2	522	524
Total	25	1271	3	10	1	0	16	0	1	970	6	4	3	0	3	0	14	2299	2313
Grand Total	59	4362	21	78	3	0	87	0	3	4986	22	75	13	0	6	1	154	9562	9716
Apprch %	1.3	98.2	0.5		3.3	0	96.7		0.1	99.5	0.4		68.4	0	31.6				
Total %	0.6	45.6	0.2		0	0	0.9		0	52.1	0.2		0.1	0	0.1		1.6	98.4	
				12				0				13				0			

McMahon Associates, Inc.

Transportation Engineers and Planners
425 Commerce Drive, Suite 200
Fort Washington, PA 19034

Municipality: Annapolis
Location: Forest Drive &
Annapolis Neck Road
Counter/Countboard No.: CH

File Name : annapolis02w
Site Code : 87654321
Start Date : 2/2/2011
Page No : 2

	Forest Dr Southbound				Martha Court Westbound				Forest Dr Northbound				Annapolis Neck Rd Eastbound				
Start Time	Left	Thru	Right	App. Total	Left	Thru	Right	App. Total	Left	Thru	Right	App. Total	Left	Thru	Right	App. Total	Int. Total
Peak Hour Analysis From 07:00 to 11:45 - Peak 1 of 1																	
Peak Hour for Entire Intersection Begins at 07:45																	
07:45	3	225	1	229	0	0	10	10	0	349	3	352	2	0	0	2	593
08:00	2	358	3	363	0	0	10	10	0	375	1	376	1	0	0	1	750
08:15	3	247	1	251	0	0	6	6	0	411	1	412	2	0	0	2	671
08:30	3	236	2	241	0	0	6	6	0	370	5	375	1	0	2	3	625
Total Volume	11	1066	7	1084	0	0	32	32	0	1505	10	1515	6	0	2	8	2639
% App. Total	1	98.3	0.6		0	0	100		0	99.3	0.7		75	0	25		
PHF	.917	.744	.583	.747	.000	.000	.800	.800	.000	.915	.500	.919	.750	.000	.250	.667	.880
			3%				0%				2%					13%	

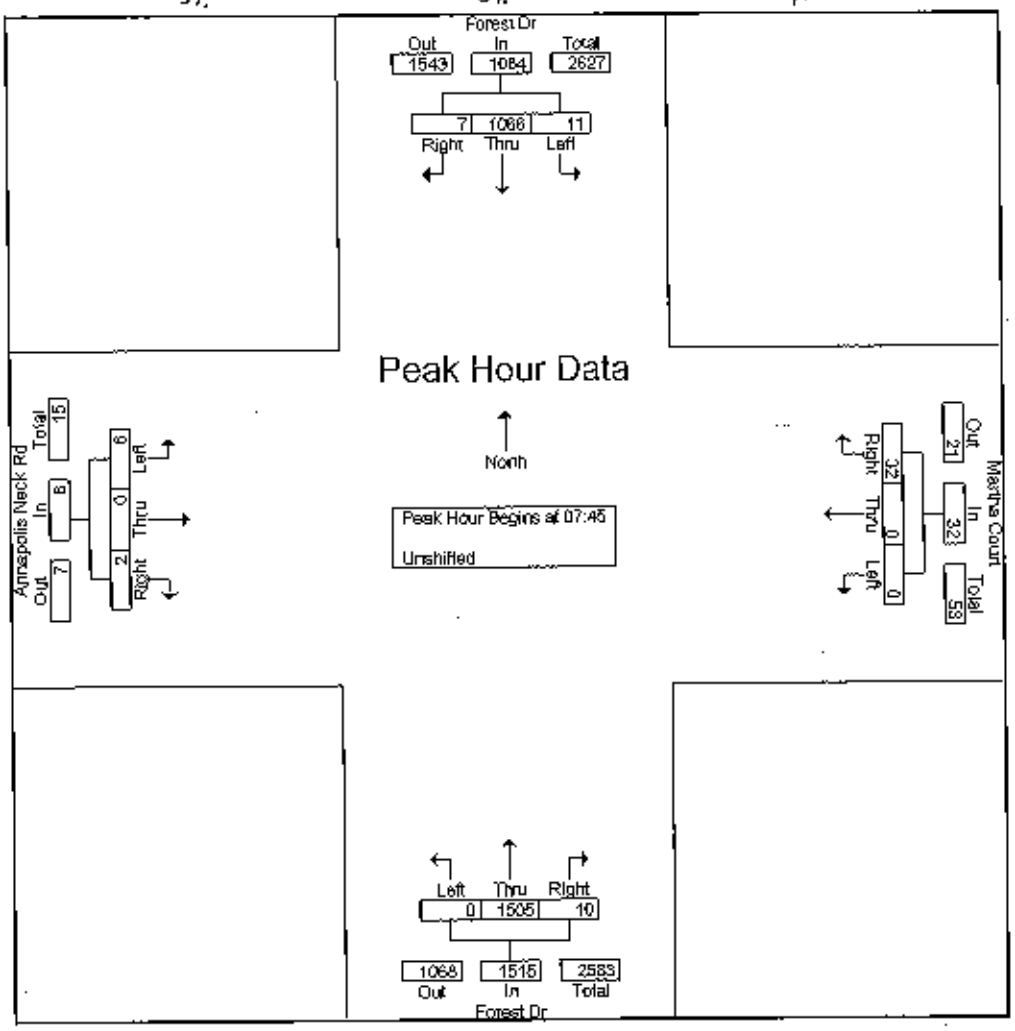

McMahon Associates, Inc.

Transportation Engineers and Planners
425 Commerce Drive, Suite 200
Fort Washington, PA 19034

Municipality: Annapolis
Location: Forest Drive &
Annapolis Neck Road
Counter/Countboard No.: CH

File Name : annapolis02w
Site Code : 87654321
Start Date : 2/2/2011
Page No : 3

	Forest Dr Southbound				Martha Court Westbound				Forest Dr Northbound				Annapolis Neck Rd Eastbound				
Start Time	Left	Thru	Right	App. Total	Left	Thru	Right	App. Total	Left	Thru	Right	App. Total	Left	Thru	Right	App. Total	Int. Total
Peak Hour Analysis From 12:00 to 17:45 - Peak 1 of 1																	
Peak Hour for Entire Intersection Begins at 16:30																	
16:30	6	348	1	355	0	0	5	5	0	267	1	268	1	0	0	1	629
16:45	1	342	3	346	0	0	5	5	0	275	1	276	0	0	0	0	627
17:00	5	348	1	354	0	0	4	4	0	268	1	269	0	0	2	2	629
17:15	10	322	0	332	1	0	6	7	1	270	3	274	1	0	0	1	614
Total Volume	22	1360	5	1387	1	0	20	21	1	1080	6	1087	2	0	2	4	2499
% App. Total	1.6	98.1	0.4		4.8	0	95.2		0.1	99.4	0.6		50	0	50		
PHF	.550	.977	.417	.977	.250	.000	.833	.750	.250	.982	.500	.985	.500	.000	.250	.500	.993
				1%				0%				1%				0%	

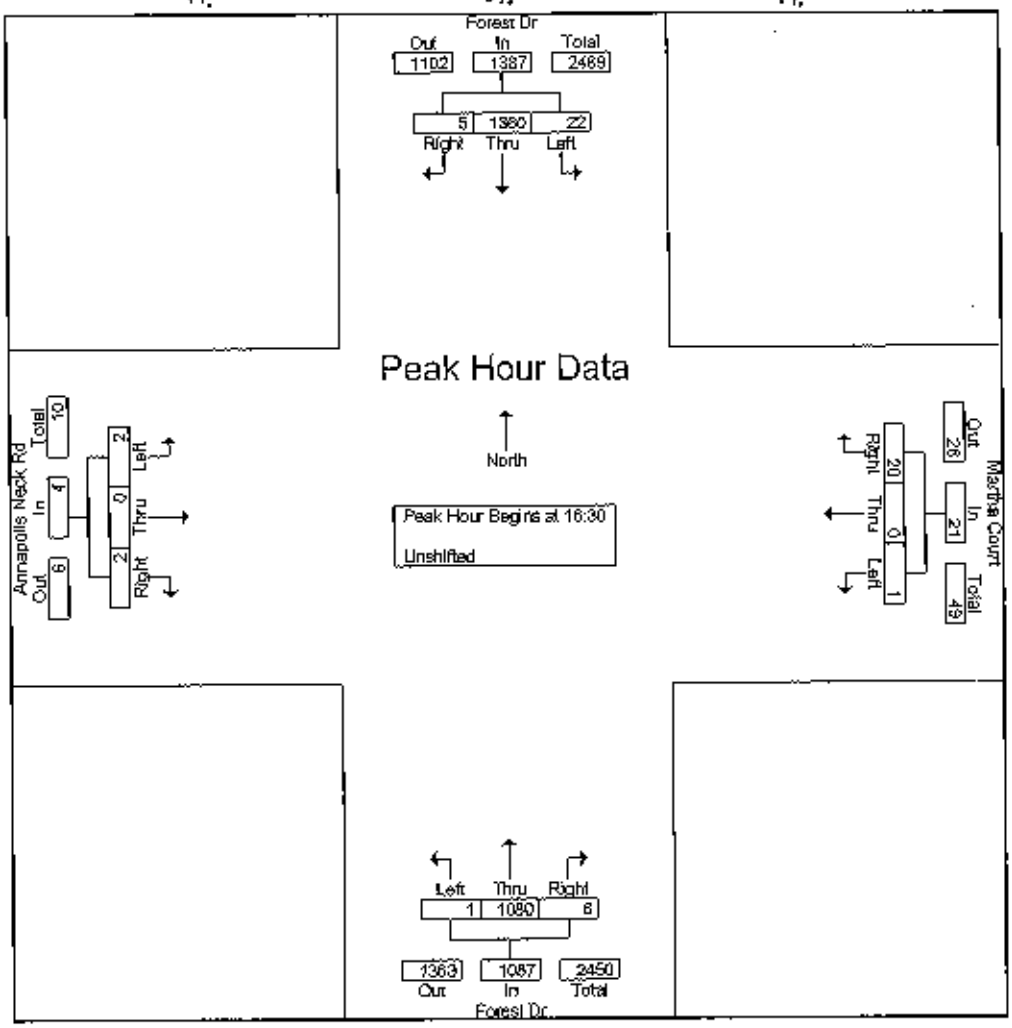

McMahon Associates, Inc.

Transportation Engineers and Planners

425 Commerce Drive, Suite 200
Fort Washington, PA 19034

Municipality: Annapolis
Location: Forest Drive &
Annapolis Neck Road / Martha Court
Counter/Countboard No.: CH

File Name : annapolis02s
Site Code : 12345678
Start Date : 1/29/2011
Page No : 1

Groups Printed- Unshifted

	Forest Dr Southbound				Martha Court Westbound				Forest Dr Northbound				Annapolis Neck Rd Eastbound						
Start Time	Left	Thru	Right	HV	Left	Thru	Right	HV	Left	Thru	Right	HV	Left	Thru	Right	HV	Int. Total	Int. Total	Int. Total
12:00	4	235	0	4	0	0	4	0	1	245	4	0	1	0	0	0	4	494	498
12:15	4	229	2	1	1	0	2	0	1	277	0	2	1	0	1	0	3	518	521
12:30	3	259	0	4	1	0	5	0	0	245	3	3	0	0	0	0	7	516	523
12:45	2	269	1	2	0	0	7	0	0	252	2	3	1	0	0	0	5	534	539
Total	13	992	3	11	2	0	18	0	2	1019	9	8	3	0	1	0	19	2062	2081
13:00	3	252	0	0	0	0	1	0	0	250	1	0	2	0	0	0	0	509	509
13:15	2	240	0	1	0	0	1	0	1	218	0	5	0	0	0	0	6	462	468
13:30	3	219	1	0	1	0	4	0	0	220	2	0	1	0	0	0	0	451	451
13:45	3	205	1	1	0	0	4	0	2	241	0	2	1	0	0	0	3	457	460
Total	11	916	2	2	1	0	10	0	3	929	3	7	4	0	0	0	9	1879	1888
14:00	1	254	1	2	0	0	2	0	0	242	0	0	2	0	0	0	2	502	504
14:15	6	231	1	0	0	0	4	0	0	235	0	4	1	0	0	0	4	476	482
14:30	2	312	0	3	0	0	4	0	0	222	2	1	1	0	1	0	4	544	548
14:45	9	257	0	1	1	0	1	0	1	228	0	2	0	0	0	0	3	497	500
Total	18	1054	2	6	1	0	11	0	1	927	2	7	4	0	1	0	13	2021	2034
Grand Total	42	2962	7	19	4	0	39	0	6	2875	14	22	11	0	2	0	41	5962	6003
Apprch %	1.4	96.4	0.2		9.3	0	90.7		0.2	99.3	0.5		84.6	0	15.4				
Total %	0.7	49.7	0.1		0.1	0	0.7		0.1	48.2	0.2		0.2	0	0		0.7	99.3	
			7				0				8				0				

McMahon Associates, Inc.

Transportation Engineers and Planners
425 Commerce Drive, Suite 200
Fort Washington, PA 19034

Municipality: Annapolis
Location: Forest Drive &
Annapolis Neck Road / Martha Court
Counter/Countboard No.: CH

File Name : annapolis02s
Site Code : 12345678
Start Date : 1/29/2011
Page No : 2

	Forest Dr Southbound				Martha Court Westbound				Forest Dr Northbound				Annapolis Neck Rd Eastbound				
Start Time	Left	Thru	Right	App. Total	Left	Thru	Right	App. Total	Left	Thru	Right	App. Total	Left	Thru	Right	App. Total	Int. Total
Peak Hour Analysis From 12:00 to 14:45 - Peak 1 of 1																	
Peak Hour for Entire Intersection Begins at 12:15																	
12:15	4	229	2	235	1	0	2	3	1	277	0	278	1	0	1	2	518
12:30	3	259	0	262	1	0	5	6	0	245	3	248	0	0	0	0	516
12:45	2	269	1	272	0	0	7	7	0	252	2	254	1	0	0	1	534
13:00	3	252	0	255	0	0	1	1	0	250	1	251	2	0	0	2	509
Total Volume	12	1009	3	1024	2	0	15	17	1	1024	6	1031	4	0	1	5	2077
% App. Total	1.2	98.5	0.3		11.8	0	88.2		0.1	99.3	0.6		80	0	20		
PHF	.750	.938	.375	.941	.500	.000	.536	.607	.250	.924	.500	.927	.500	.000	.250	.625	.972
		1%				0%				1%				0%			

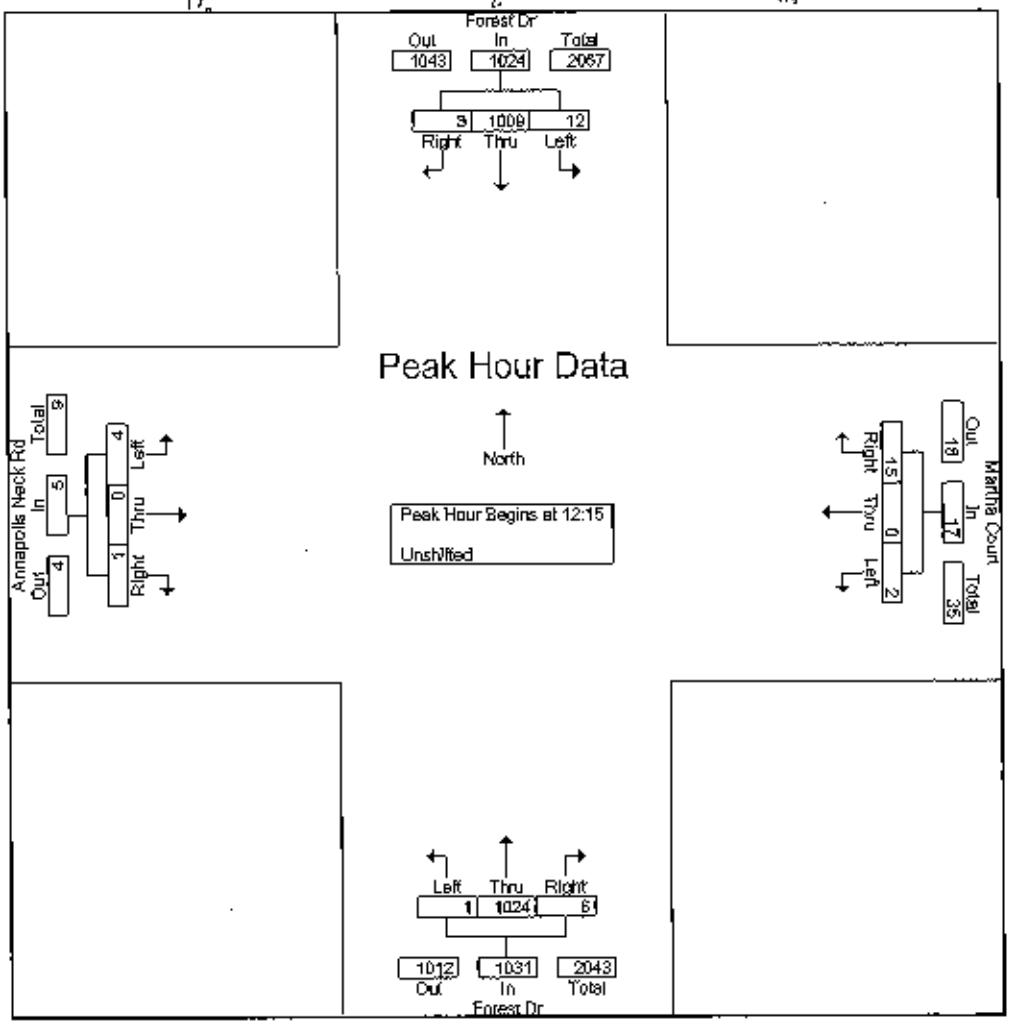

(8)

McMahon Associates, Inc.

Transportation Engineers and Planners

425 Commerce Drive, Suite 200
Fort Washington, PA 19034

Municipality: Annapolis
Location: Forest Drive &
Hillsmere Drive & Bay Ridge Drive
Counter/Countboard No.: BW

File Name : annapolis01w
Site Code : 11061101
Start Date : 2/2/2011
Page No : 1

Groups Printed- Unshifted

	Forest Drive Southbound				Bay Ridge Dr Westbound				Forest Drive Northbound				Hillsmere Dr Eastbound						
Start Time	Left	Thru	Right	HV	Left	Thru	Right	HV	Left	Thru	Right	HV	Left	Thru	Right	HV	Exclu. Total	Inclu. Total	Inc. Total
06:00	1	20	3	5	8	0	0	1	2	87	15	1	24	4	5	0	7	169	176
06:15	1	18	9	8	7	2	1	0	2	118	22	2	35	6	3	1	11	224	235
06:30	1	31	9	8	13	3	1	1	6	129	33	5	29	7	4	2	16	266	282
06:45	5	56	9	7	15	4	3	2	4	168	30	8	53	12	5	2	19	364	383
Total	8	125	30	28	43	9	5	4	14	502	100	16	141	29	17	5	53	1023	1076
07:00	5	58	12	5	27	7	2	0	6	217	41	1	59	11	8	0	6	453	459
07:15	2	80	23	9	23	10	2	2	9	236	65	6	66	22	11	0	17	549	566
07:30	10	95	24	4	24	8	2	1	10	243	107	3	56	30	7	0	8	616	624
07:45	8	122	44	8	54	25	4	3	28	268	80	9	67	29	12	2	22	741	763
Total	25	355	103	26	128	50	10	6	53	964	293	19	248	92	38	2	53	2359	2412
08:00	2	144	140	11	66	30	0	1	48	235	83	5	83	22	15	5	22	868	890
08:15	8	168	166	5	34	17	4	2	43	218	100	6	140	56	28	2	15	982	997
08:30	1	168	49	9	59	16	2	1	15	232	72	2	142	31	36	4	16	823	839
08:45	6	171	24	6	49	10	4	1	28	240	84	11	73	29	32	1	19	750	769
Total	17	651	379	31	208	73	10	5	134	925	339	24	438	138	111	12	72	3423	3495
*** BREAK ***																			
15:00	8	198	116	2	94	48	5	2	26	165	59	4	50	16	23	1	9	808	817
15:15	6	206	107	10	92	40	8	4	31	173	60	3	85	32	39	1	18	879	897
15:30	11	218	81	9	95	30	3	1	18	177	58	5	133	39	49	6	21	912	933
15:45	8	161	81	1	104	25	5	4	28	191	59	8	56	24	31	5	18	773	791
Total	33	783	385	22	385	143	21	11	103	706	236	20	324	111	142	13	66	3372	3438
16:00	6	202	69	4	101	35	8	4	25	137	64	8	51	22	27	2	18	747	765
16:15	9	174	82	5	86	32	4	1	28	160	78	11	71	26	25	3	20	775	795
16:30	7	186	100	4	96	31	10	1	20	194	59	9	58	24	25	1	15	810	825
16:45	6	227	86	6	95	38	9	2	22	160	78	2	72	33	23	3	13	849	862
Total	28	789	337	19	378	136	31	8	95	651	279	30	252	105	100	9	66	3181	3247
17:00	6	224	113	5	103	54	4	1	32	164	60	6	64	31	36	1	13	891	904
17:15	7	189	87	2	111	41	7	3	31	169	66	3	85	37	33	0	8	903	911
17:30	3	225	86	3	119	44	2	0	24	152	46	2	88	31	41	4	9	861	870
17:45	3	231	82	4	97	42	5	1	22	130	65	2	56	22	26	0	7	781	788
Total	19	869	368	14	430	181	18	5	109	635	257	13	293	121	136	5	37	3436	3473
Grand Total	130	3572	1602	140	1572	592	95	39	508	4383	1504	122	1696	596	544	46	347	16794	17141
Apprch %	2.5	67.3	30.2		69.6	26.2	4.2		7.9	68.5	23.5		59.8	21	19.2				
Total %	0.8	21.3	9.5		9.4	3.5	0.6		3	26.1	9		10.1	3.5	3.2		2	98	
				16				6				13				8			

McMahon Associates, Inc.

Transportation Engineers and Planners
425 Commerce Drive, Suite 200
Fort Washington, PA 19034

Municipality: Annapolis
Location: Forest Drive &
Hillsmere Drive & Bay Ridge Drive
Counter/Countboard No.: BW

File Name : annapolis01w
Site Code : 11061101
Start Date : 2/2/2011
Page No : 2

	Forest Drive Southbound				Bay Ridge Dr Westbound				Forest Drive Northbound				Hillsmere Dr Eastbound				
Start Time	Left	Thru	Right	App. Total	Left	Thru	Right	App. Total	Left	Thru	Right	App. Total	Left	Thru	Right	App. Total	Int. Total
Peak Hour Analysis From 06:00 to 11:45 - Peak 1 of 1																	
Peak Hour for Entire Intersection Begins at 08:00																	
08:00	2	144	140	286	66	30	0	96	48	235	83	366	83	22	15	120	868
08:15	8	168	168	342	34	17	4	55	43	218	100	361	140	56	28	224	982
08:30	1	168	49	218	59	16	2	77	15	232	72	319	142	31	36	209	823
08:45	6	171	24	201	49	10	4	63	28	240	84	352	73	29	32	134	750
Total Volume	17	651	379	1047	208	73	10	291	134	925	339	1398	438	138	111	687	3423
% App. Total	1.6	62.2	36.2		71.5	25.1	3.4		9.6	66.2	24.2		63.8	20.1	16.2		
PHF	.531	.952	.571	.765	.788	.608	.625	.758	.698	.964	.848	.955	.771	.616	.771	.767	.871
				3%				2%				2%				2%	

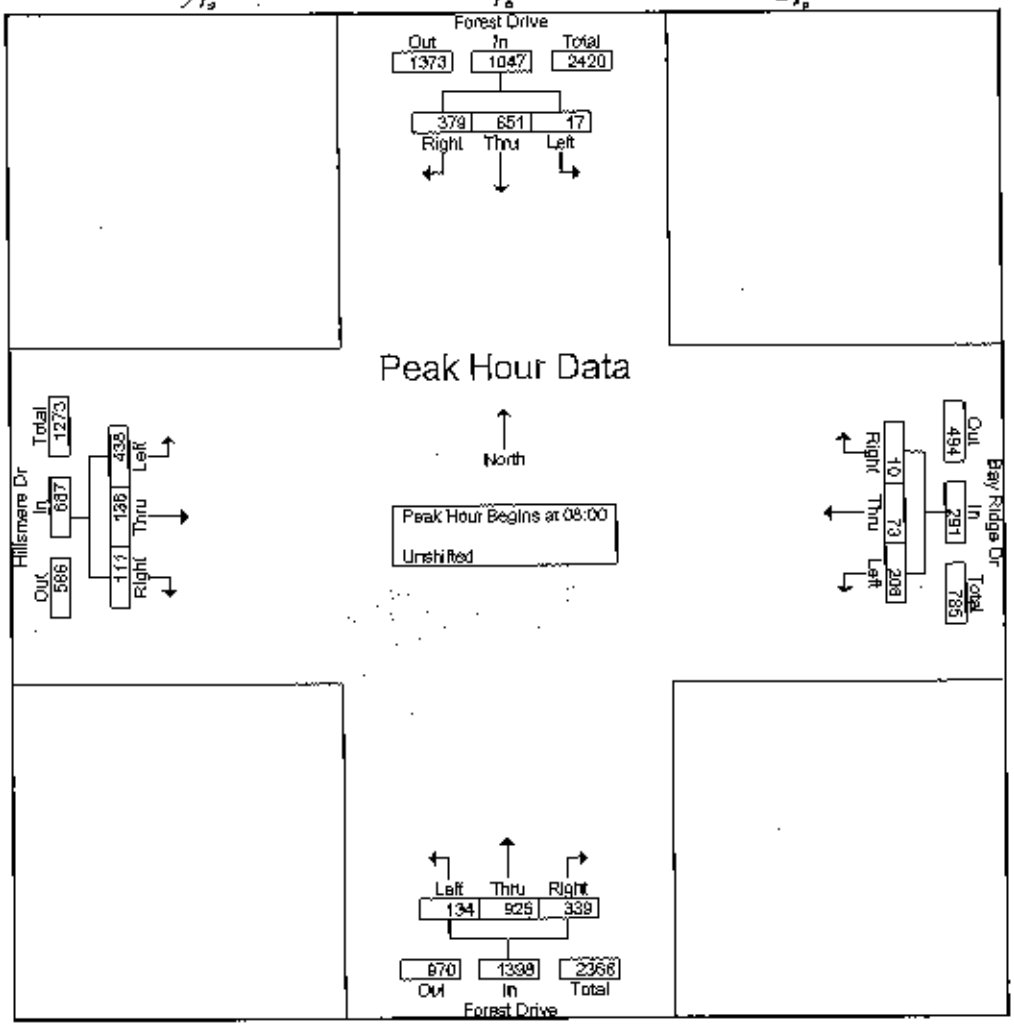

McMahon Associates, Inc.

Transportation Engineers and Planners

425 Commerce Drive, Suite 200
Fort Washington, PA 19034

Municipality: Annapolis
Location: Forest Drive &
Hillsmere Drive & Bay Ridge Drive
Counter/Countboard No.: BW

File Name : annapolis01w
Site Code : 11061101
Start Date : 2/2/2011
Page No : 3

	Forest Drive Southbound				Bay Ridge Dr Westbound				Forest Drive Northbound				Hillsmere Dr Eastbound				
Start Time	Left	Thru	Right	App. Total	Left	Thru	Right	App. Total	Left	Thru	Right	App. Total	Left	Thru	Right	App. Total	Int. Total
Peak Hour Analysis From 12:00 to 17:45 - Peak 1 of 1																	
Peak Hour for Entire Intersection Begins at 16:45																	
16:45	6	227	86	319	95	38	9	142	22	160	78	260	72	33	23	128	849
17:00	6	224	113	343	103	54	4	161	32	164	60	256	64	31	36	131	891
17:15	7	189	87	283	111	41	7	159	31	189	86	306	85	37	33	155	903
17:30	3	225	86	314	119	44	2	165	24	152	46	222	88	31	41	160	861
Total Volume	22	865	372	1259	428	177	22	627	109	665	270	1044	309	132	133	574	3504
% App. Total	1.7	68.7	29.5		68.3	28.2	3.5		10.4	63.7	25.9		53.8	23	23.2		
PHF	.786	.953	.823	.918	.899	.819	.611	.950	.852	.880	.785	.853	.878	.892	.811	.897	.970

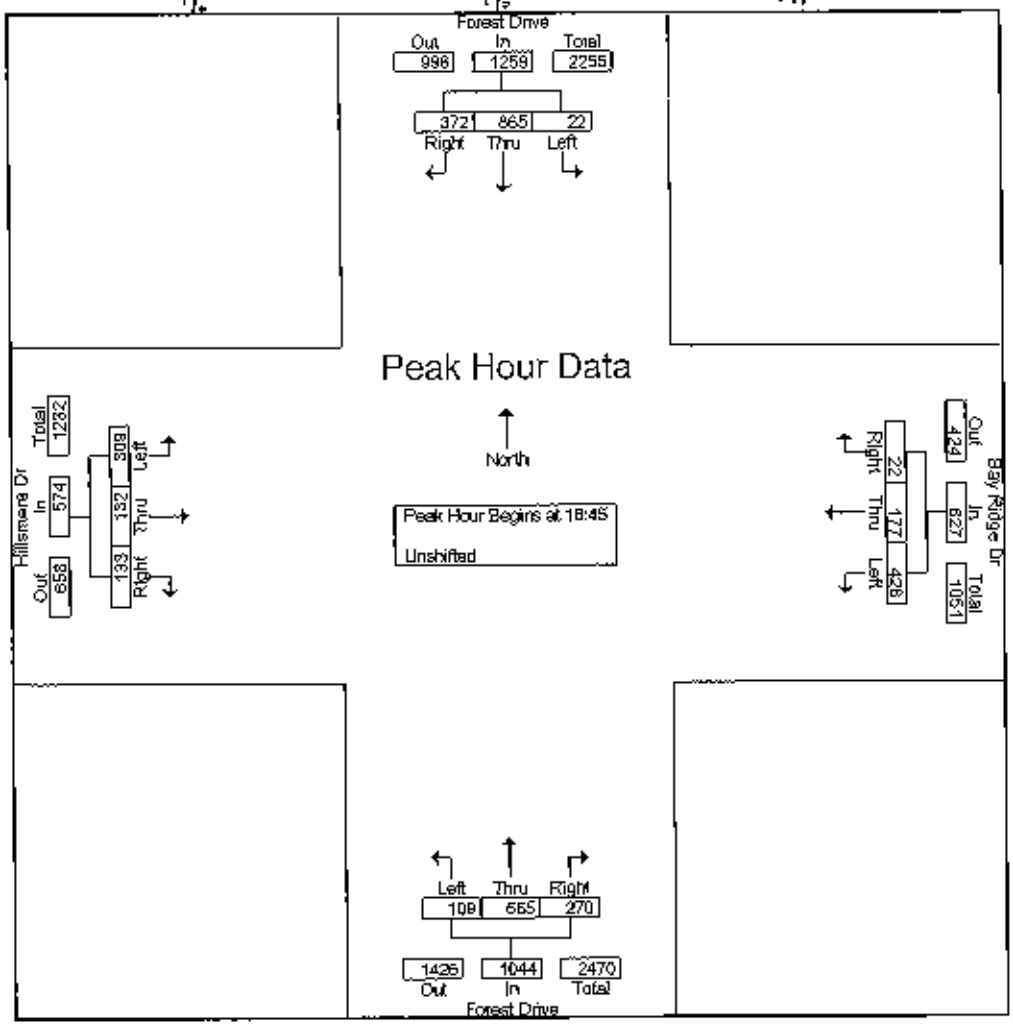

McMahon Associates, Inc.

Transportation Engineers and Planners

425 Commerce Drive, Suite 200
Fort Washington, PA 19034

Municipality: Annapolis
Location: Forest Drive &
Hillsmere Drive / Bay Ridge Drive
Counter/Countboard No.: BW

File Name : annapolis01s
Site Code : 11061101
Start Date : 2/5/2011
Page No : 1

Groups Printed- Unshifted

	Forest Dr Southbound				Bay Ridge Dr Westbound				Forest Dr Northbound				Hillsmere Dr Eastbound						
Start Time	Left	Thru	Right	HV	Left	Thru	Right	HV	Left	Thru	Right	HV	Left	Thru	Right	HV	Exclu. Total	Inclu. Total	Int. Total
12:00	2	146	81	1	86	33	5	1	32	167	53	1	63	24	29	0	3	723	726
12:15	4	179	62	0	94	27	6	1	25	191	78	0	84	24	31	1	2	805	807
12:30	7	157	56	3	69	28	12	0	19	163	59	1	79	16	32	0	4	697	701
12:45	10	132	54	4	72	35	11	1	26	173	64	3	67	14	32	1	9	690	699
Total	23	616	253	8	321	123	34	3	102	694	254	5	293	78	124	2	18	2915	2933
13:00	7	174	69	0	90	35	9	1	28	168	66	0	65	28	22	0	1	761	762
13:15	4	152	70	3	76	32	13	1	22	137	81	2	76	32	21	0	6	716	722
13:30	6	148	62	3	64	28	12	1	18	131	64	3	65	20	28	1	8	646	654
13:45	8	138	55	10	71	24	8	0	26	167	58	4	60	18	38	0	14	671	685
Total	25	612	256	16	301	119	42	3	94	603	269	9	266	98	109	1	29	2794	2823
14:00	8	168	67	2	63	27	7	0	17	166	68	9	49	21	28	0	11	689	700
14:15	6	147	59	0	67	30	3	1	20	142	39	2	66	20	21	0	3	620	623
14:30	4	165	64	1	53	27	6	0	20	144	60	1	62	19	17	1	3	641	644
14:45	7	171	60	3	67	21	8	0	21	140	60	5	61	28	15	0	8	659	667
Total	25	651	250	6	250	105	24	1	78	592	227	17	238	88	81	1	25	2609	2634
Grand Total	73	1879	759	30	872	347	100	7	274	1889	750	31	797	264	314	4	72	8318	8390
Apprch %	2.7	69.3	28		66.1	26.3	7.6		9.4	64.8	25.7		58	19.2	22.8				
Total %	0.9	22.6	9.1		10.5	4.2	1.2		3.3	22.7	9		9.6	3.2	3.8		0.9	99.1	
			7				3				4				2				

McMahon Associates, Inc.

Transportation Engineers and Planners
425 Commerce Drive, Suite 200
Fort Washington, PA 19034

Municipality: Annapolis
Location: Forest Drive &
Hillsmere Drive / Bay Ridge Drive
Counter/Countboard No.: BW

File Name : annapolis01s
Site Code : 11061101
Start Date : 2/5/2011
Page No : 2

	Forest Dr Southbound				Bay Ridge Dr Westbound				Forest Dr Northbound				Hillsmere Dr Eastbound				
Start Time	Left	Thru	Right	App. Total	Left	Thru	Right	App. Total	Left	Thru	Right	App. Total	Left	Thru	Right	App. Total	Int. Total
Peak Hour Analysis From 12:00 to 14:45 - Peak 1 of 1																	
Peak Hour for Entire Intersection Begins at 12:15																	
12:15	4	179	62	245	94	27	6	127	25	191	78	294	84	24	31	139	805
12:30	7	157	56	220	69	28	12	109	19	163	59	241	79	16	32	127	697
12:45	10	132	54	196	72	35	11	118	26	173	64	263	67	14	32	113	690
13:00	7	174	69	250	90	35	9	134	28	168	66	262	65	26	22	115	761
Total Volume	28	642	241	911	325	125	38	488	98	695	267	1060	295	82	117	494	2953
% App. Total	3.1	70.5	26.5		66.6	25.6	7.8		9.2	65.6	25.2		59.7	16.6	23.7		
PHF	.700	.897	.873	.911	.864	.893	.792	.910	.875	.910	.856	.901	.878	.732	.914	.888	.917

1% 1% 0% 0%

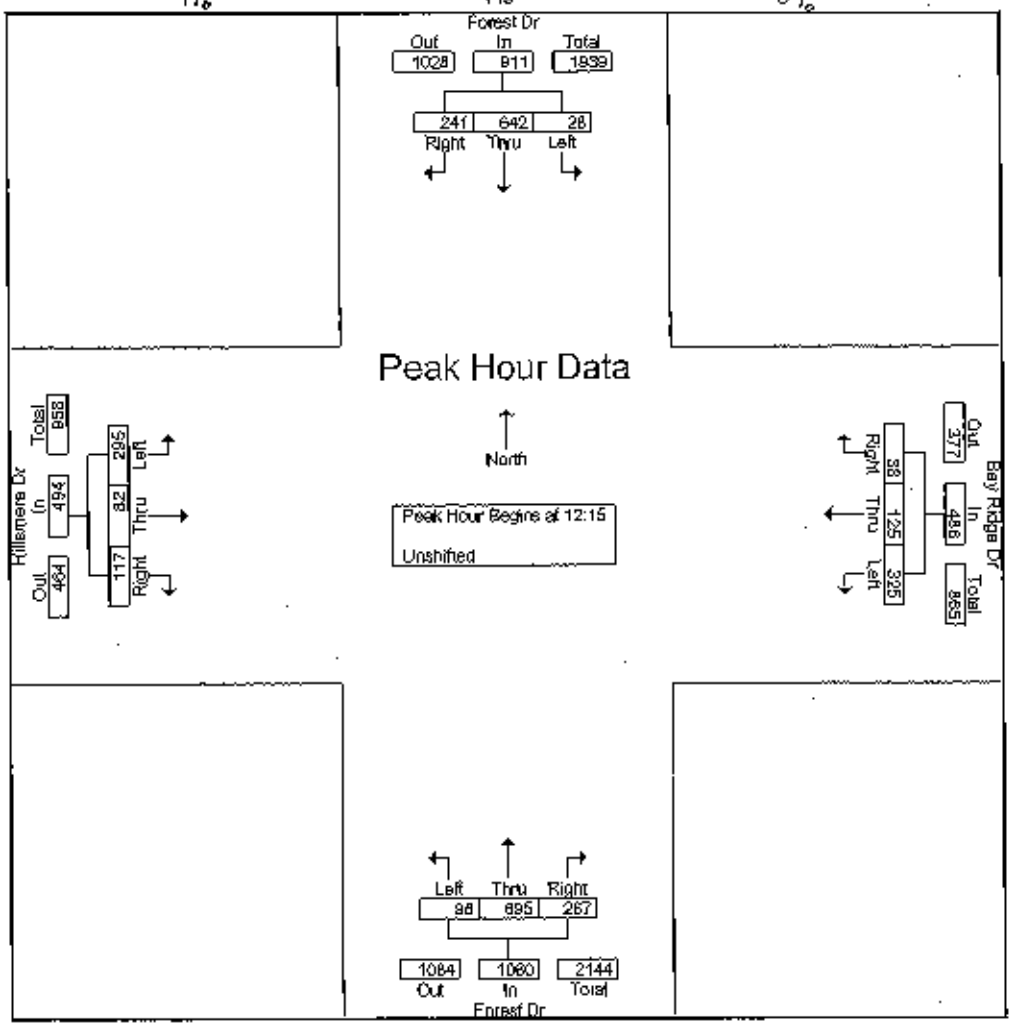

May/June Count Data

Sabra, Wang & Associates

1504 Joh Avenue
Baltimore, MD 21227

Weather: Clear
Counted By: SWA
Town: Annapolis
County: Anne Arundel

File Name : Forest@Hilltop_Weekday
Site Code : 00000000
Start Date : 5/26/2011 (R)
Page No : 1

Groups Printed- Unshifted

	HILLTOP LN From North				FOREST DR From East				HILLTOP LN From South				FOREST DR From West				
Start Time	Right	Thru	Left	Peds	Right	Thru	Left	Peds	Right	Thru	Left	Peds	Right	Thru	Left	Peds	Int. Total
07:45 AM	210	0	0	0	3	493	0	0	0	0	0	0	0	307	150	0	1163
Total	210	0	0	0	3	493	0	0	0	0	0	0	0	307	150	0	1163
08:00 AM	170	0	0	0	1	515	0	0	0	0	0	0	0	339	143	1	1169
08:15 AM	198	0	0	0	0	473	0	0	0	0	0	0	0	296	131	0	1098
08:30 AM	172	0	0	1	4	469	0	0	0	0	0	0	0	316	154	0	1116
Total	540	0	0	1	5	1457	0	0	0	0	0	0	0	951	428	1	3383
04:45 PM	179	0	0	0	6	370	0	0	0	0	0	0	1	463	213	0	1232
Total	179	0	0	0	6	370	0	0	0	0	0	0	1	463	213	0	1232
05:00 PM	277	0	0	0	1	295	0	0	0	0	0	0	0	463	201	0	1237
05:15 PM	281	0	0	0	3	351	0	0	0	0	0	0	0	496	206	0	1337
05:30 PM	214	0	0	0	10	302	0	0	0	0	0	0	0	464	219	0	1209
Grand Total	1701	0	0	1	28	3268	0	0	0	0	0	0	1	3144	1417	1	9561
Apprch %	99.9	0	0	0.1	0.8	99.2	0	0	0	0	0	0	0	68.9	31.1	0	
Total %	17.8	0	0	0	0.3	34.2	0	0	0	0	0	0	0	32.9	14.8	0	

Sabra, Wang & Associates

1504 Joh Avenue
Baltimore, MD 21227

File Name : Forest@Hilltop_Weekday
Site Code : 00000000
Start Date : 5/26/2011 (R)
Page No : 2

	HILLTOP LN From North					FOREST DR From East					HILLTOP LN From South					FOREST DR From West					
Start Time	Right	Thru	Left	Peds	App. Total	Right	Thru	Left	Peds	App. Total	Right	Thru	Left	Peds	App. Total	Right	Thru	Left	Peds	App. Total	Int. Total
Peak Hour Analysis From 07:45 AM to 11:45 AM - Peak 1 of 1																					
Peak Hour for Entire Intersection Begins at 07:45 AM																					
07:45 AM	**210**	0	0	0	**210**	3	493	0	0	496	0	0	0	0	0	0	307	150	0	457	1163
08:00 AM	170	0	0	0	170	**1**	**515**	0	0	**516**	0	0	0	0	0	0	**339**	143	**1**	**483**	**1169**
08:15 AM	198	0	0	0	198	0	473	0	0	473	0	0	0	0	0	0	296	131	0	427	1098
08:30 AM	172	0	0	**1**	173	4	469	0	0	473	0	0	0	0	0	0	316	154	0	470	1116
Total Volume	750	0	0	1	751	8	1950	0	0	1958	0	0	0	0	0	0	1258	578	1	1837	4546
% App. Total	99.9	0	0	0.1		0.4	99.6	0	0		0	0	0	0		0	68.5	31.5	0.1		
PHF	.893	.000	.000	.250	.894	.500	.947	.000	.000	.949	.000	.000	.000	.000	.000	.000	.928	.938	.250	.951	.972

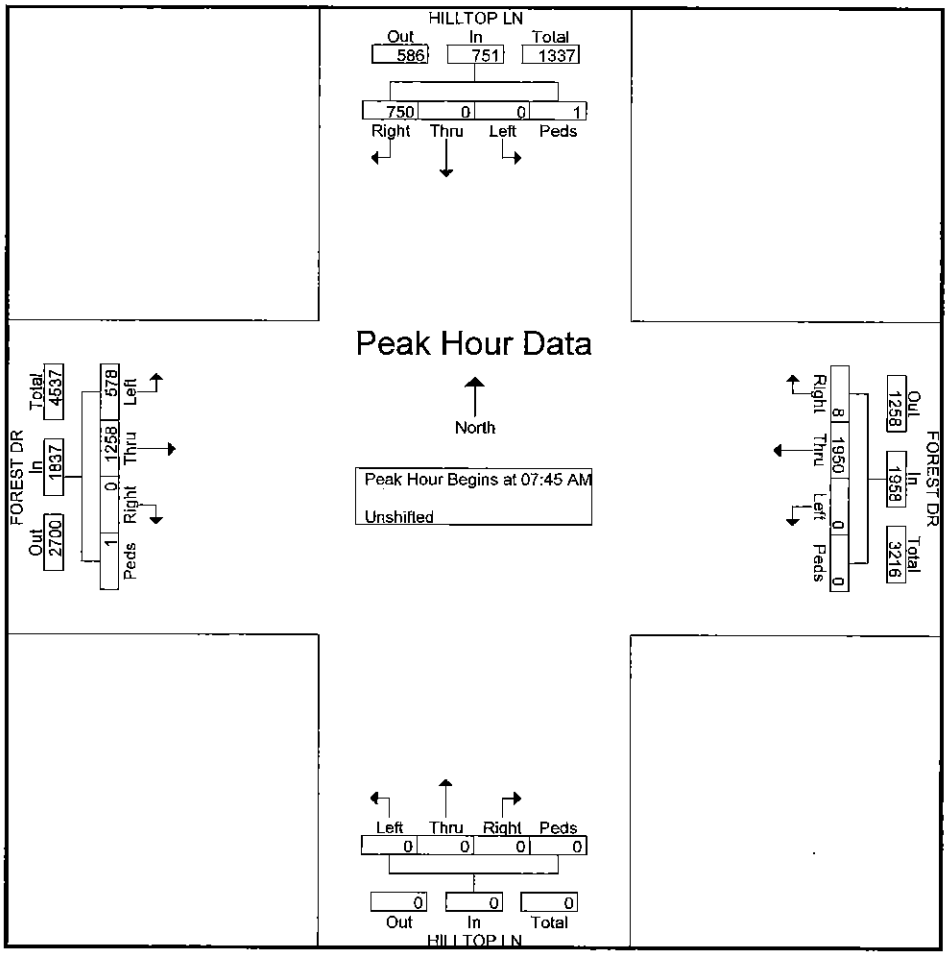

Sabra, Wang & Associates

1504 Joh Avenue
Baltimore, MD 21227

File Name : Forest@Hilltop_Weekday
Site Code : 00000000
Start Date : 5/26/2011
Page No : 3

	HILLTOP LN From North					FOREST DR From East					HILLTOP LN From South					FOREST DR From West					
Start Time	Right	Thru	Left	Peds	App. Total	Right	Thru	Left	Peds	App. Total	Right	Thru	Left	Peds	App. Total	Right	Thru	Left	Peds	App. Total	Int. Total
Peak Hour Analysis From 12:00 PM to 05:30 PM - Peak 1 of 1																					
Peak Hour for Entire Intersection Begins at 04:45 PM																					
04:45 PM	179	0	0	0	179	6	**370**	0	0	**376**	0	0	0	0	0	**1**	463	213	0	677	1232
05:00 PM	277	0	0	0	277	1	295	0	0	296	0	0	0	0	0	0	463	201	0	664	1237
05:15 PM	**281**	0	0	0	**281**	3	351	0	0	354	0	0	0	0	0	0	**496**	206	0	**702**	**1337**
05:30 PM	214	0	0	0	214	**10**	302	0	0	312	0	0	0	0	0	0	464	**219**	0	683	1209
Total Volume	951	0	0	0	951	20	1318	0	0	1338	0	0	0	0	0	**1**	1886	839	0	2726	5015
% App. Total	100	0	0	0		1.5	98.5	0	0		0	0	0	0		0	69.2	30.8	0		
PHF	.846	.000	.000	.000	.846	.500	.891	.000	.000	.890	.000	.000	.000	.000	.000	.250	.951	.958	.000	.971	.938

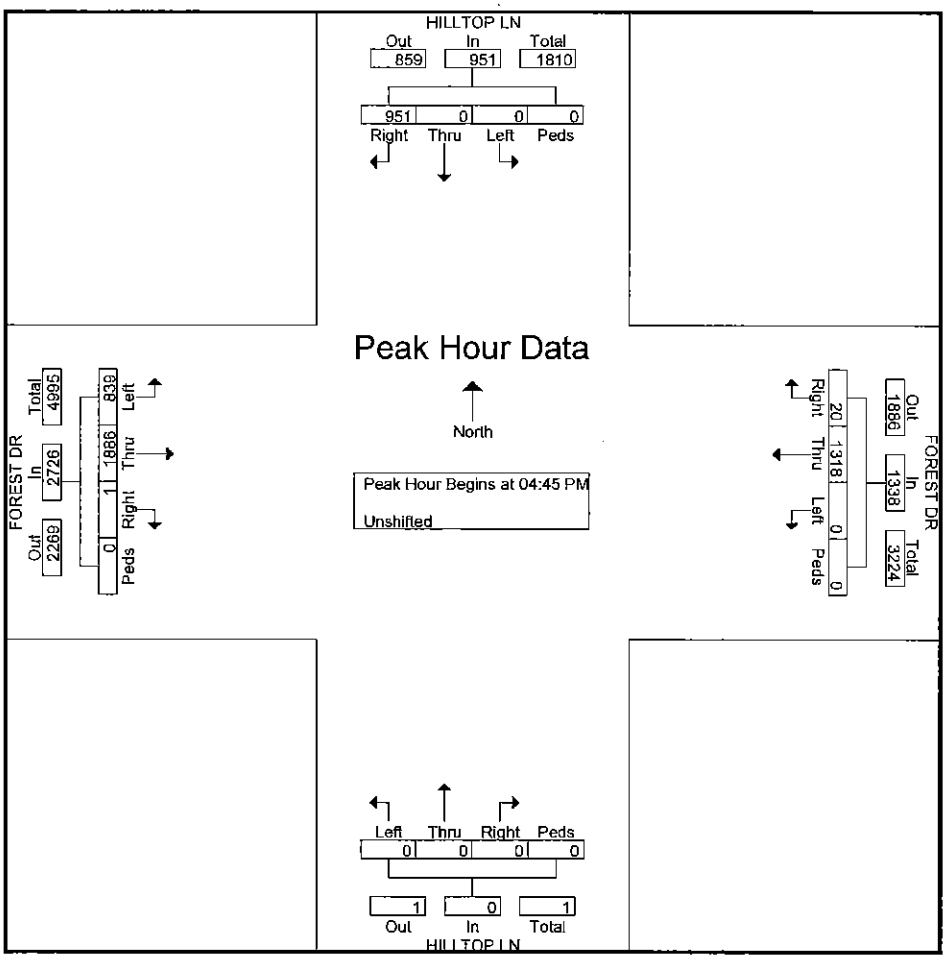

Sabra, Wang & Associates

1504 Joh Avenue
Baltimore, MD 21227

Weather: SUNNY
Counted By: SWA
Town: ANNAPOLIS
County ANNE ARUNDEL

File Name : FOREST @ HILLTOP_SAT
Site Code : 00000000
Start Date : 6/4/2011
Page No : 1

Groups Printed- Unshifted

	HILLTOP LN From North					FOREST DR From East					NO ENTRANCE From South					FOREST DR From West					
Start Time	Right	Thru	Left	Peds	App. Total	Right	Thru	Left	Peds	App. Total	Right	Thru	Left	Peds	App. Total	Right	Thru	Left	Peds	App. Total	Int. Total
11:30 AM	127	0	0	0	127	10	305	0	0	315	0	0	0	0	0	0	290	127	0	417	859
11:45 AM	115	0	0	1	116	3	338	0	0	341	0	0	0	0	0	0	353	113	1	467	924
Total	242	0	0	1	243	13	643	0	0	656	0	0	0	0	0	0	643	240	1	884	1783
12:00 PM	136	0	0	0	136	3	346	0	0	349	0	0	0	0	0	0	329	138	0	467	952
12:15 PM	118	0	0	0	118	2	330	0	0	332	0	0	0	0	0	0	301	123	0	424	874
Grand Total	496	0	0	1	497	18	1319	0	0	1337	0	0	0	0	0	0	1273	501	1	1775	3609
Apprch %	99.8	0	0	0.2		1.3	98.7	0	0		0	0	0	0		0	71.7	28.2	0.1		
Total %	13.7	0	0	0	13.8	0.5	36.5	0	0	37	0	0	0	0	0	0	35.3	13.9	0	49.2	

Sabra, Wang & Associates

1504 Joh Avenue
Baltimore, MD 21227

File Name : FOREST @ HILLTOP_SAT
Site Code : 00000000
Start Date : 6/4/2011
Page No : 2

	HILLTOP LN From North					FOREST DR From East					NO ENTRANCE From South					FOREST DR From West					
Start Time	Right	Thru	Left	Peds	App. Total	Right	Thru	Left	Peds	App. Total	Right	Thru	Left	Peds	App. Total	Right	Thru	Left	Peds	App. Total	Int. Total
Peak Hour Analysis From 11:30 AM to 12:15 PM - Peak 1 of 1																					
Peak Hour for Entire Intersection Begins at 11:30 AM																					
11:30 AM	127	0	0	0	127	**10**	305	0	0	315	0	0	0	0	0	0	290	127	0	417	859
11:45 AM	115	0	0	**1**	116	3	338	0	0	341	0	0	0	0	0	0	**353**	113	**1**	**467**	924
12:00 PM	**136**	0	0	0	**136**	3	**346**	0	0	**349**	0	0	0	0	0	0	329	**138**	0	467	**952**
12:15 PM	118	0	0	0	118	2	330	0	0	332	0	0	0	0	0	0	301	123	0	424	874
Total Volume	496	0	0	1	497	18	1319	0	0	1337	0	0	0	0	0	0	1273	501	1	1775	3609
% App. Total	99.8	0	0	0.2		1.3	98.7	0	0		0	0	0	0		0	71.7	28.2	0.1		
PHF	.912	.000	.000	.250	.914	.450	.953	.000	.000	.958	.000	.000	.000	.000	.000	.000	.902	.908	.250	.950	.948

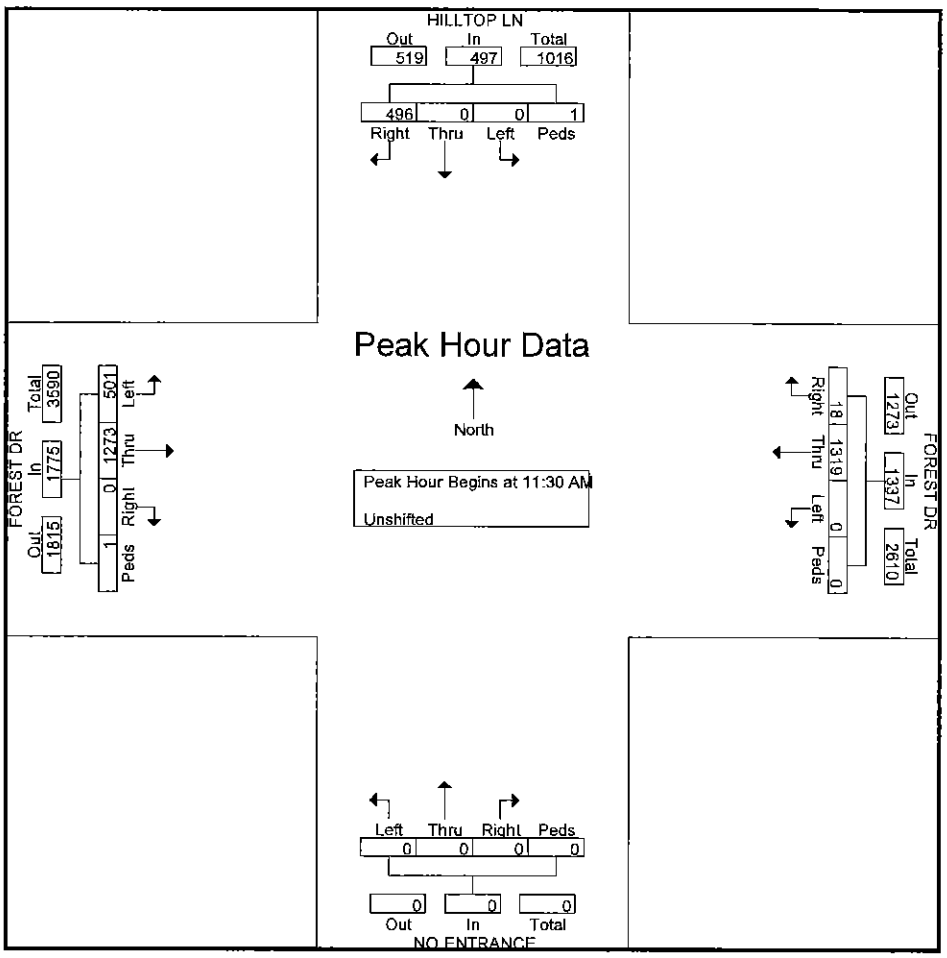

Sabra, Wang & Associates

1504 Joh Avenue
Baltimore, MD 21227

Weather: Clear
Counted By: SWA
Town: Annapolis
County: Anne Arundel

File Name : Forest@Spa_Weekday
Site Code : 00000000
Start Date : 5/19/2011 (R)
Page No : 1

Groups Printed- Unshifted

	SPA RD From North				FOREST DR From East				SPA RD From South				FOREST DR From West				
Start Time	Right	Thru	Left	Peds	Right	Thru	Left	Peds	Right	Thru	Left	Peds	Right	Thru	Left	Peds	Int. Total
07:45 AM	0	30	36	0	48	402	0	1	8	54	74	0	13	278	7	0	951
Total	0	30	36	0	48	402	0	1	8	54	74	0	13	278	7	0	951
08:00 AM	0	29	65	0	62	397	5	1	0	33	77	0	9	289	1	1	969
08:15 AM	0	22	72	0	36	405	1	0	0	23	76	0	12	320	2	0	969
08:30 AM	0	10	51	0	39	416	0	1	0	25	43	0	11	285	0	0	881
Total	0	61	188	0	137	1218	6	2	0	81	196	0	32	894	3	1	2819
04:45 PM	0	7	85	0	38	296	11	2	1	18	26	0	57	400	3	0	944
Total	0	7	85	0	38	296	11	2	1	18	26	0	57	400	3	0	944
05:00 PM	0	18	61	0	34	270	0	0	0	11	40	0	40	415	3	0	892
05:15 PM	0	18	102	0	20	289	0	2	0	10	41	0	50	379	0	0	911
05:30 PM	0	17	107	0	17	264	5	1	0	8	28	0	62	409	0	1	919
Grand Total	0	151	579	0	294	2739	22	8	9	182	405	0	254	2775	16	2	7436
Apprch %	0	20.7	79.3	0	9.6	89.4	0.7	0.3	1.5	30.5	68	0	8.3	91.1	0.5	0.1	
Total %	0	2	7.8	0	4	36.8	0.3	0.1	0.1	2.4	5.4	0	3.4	37.3	0.2	0	

Sabra, Wang & Associates

1504 Joh Avenue
Baltimore, MD 21227

File Name : Forest@Spa_Weekday
Site Code : 00000000
Start Date : 5/19/2011
Page No : 2

	SPA RD From North					FOREST DR From East					SPA RD From South					FOREST DR From West					
Start Time	Right	Thru	Left	Peds	App. Total	Right	Thru	Left	Peds	App. Total	Right	Thru	Left	Peds	App. Total	Right	Thru	Left	Peds	App. Total	Int. Total
Peak Hour Analysis From 07:45 AM to 11:45 AM - Peak 1 of 1																					
Peak Hour for Entire Intersection Begins at 07:45 AM																					
07:45 AM	0	**30**	36	0	66	48	402	0	**1**	451	**8**	**54**	74	0	**136**	**13**	278	**7**	0	298	951
08:00 AM	0	29	65	0	94	**62**	397	**5**	1	**465**	0	33	77	0	110	9	289	1	1	300	**969**
08:15 AM	0	22	**72**	0	94	36	405	1	0	442	0	23	76	0	99	12	**320**	2	0	**334**	969
08:30 AM	0	10	51	0	61	39	**416**	0	1	456	0	25	43	0	68	11	285	0	0	296	881
Total Volume	0	91	224	0	315	185	1620	6	3	1814	8	135	270	0	413	45	1172	10	1	1228	3770
% App. Total	0	28.9	71.1	0		10.2	89.3	0.3	0.2		1.9	32.7	65.4	0		3.7	95.4	0.8	0.1		
PHF	.000	.758	.778	.000	.838	.746	.974	.300	.750	.975	.250	.625	.877	.000	.759	.865	.916	.357	.250	.919	.973

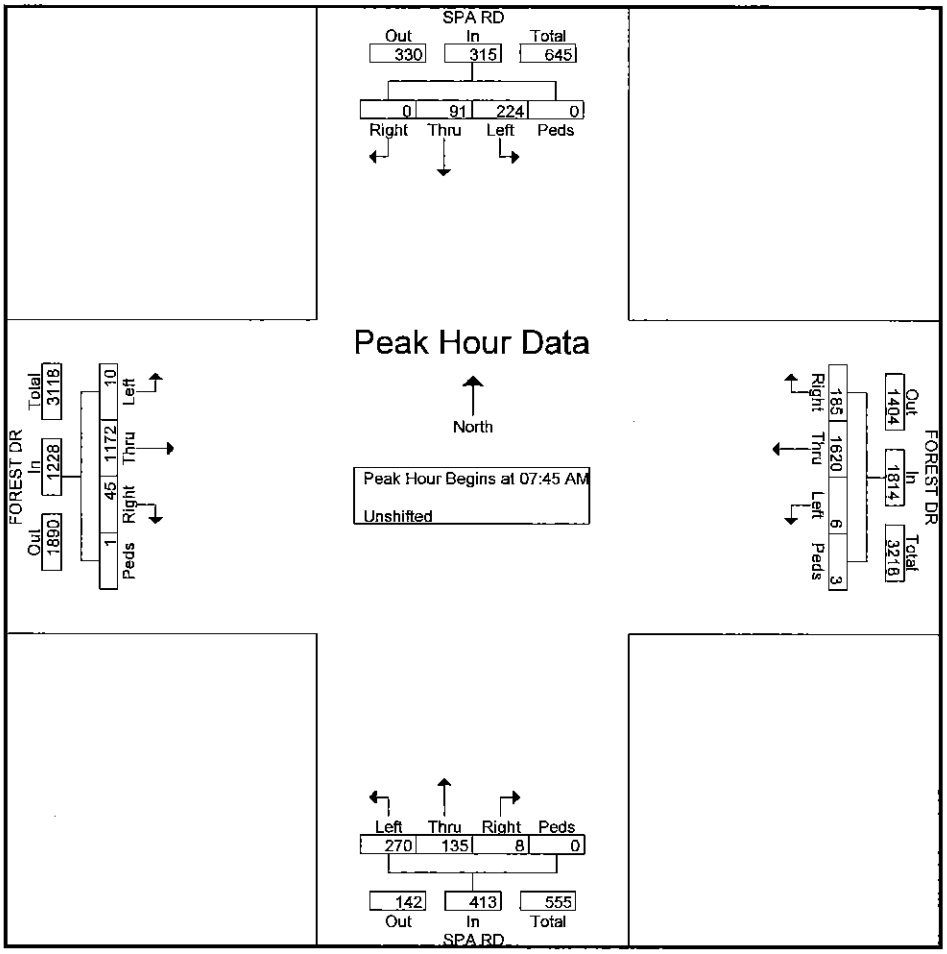

Sabra, Wang & Associates

1504 Joh Avenue
Baltimore, MD 21227

File Name : Forest@Spa_Weekday
Site Code : 00000000
Start Date : 5/19/2011
Page No : 3

	SPA RD From North					FOREST DR From East					SPA RD From South					FOREST DR From West					
Start Time	Right	Thru	Left	Peds	App. Total	Right	Thru	Left	Peds	App. Total	Right	Thru	Left	Peds	App. Total	Right	Thru	Left	Peds	App. Total	Int. Total
Peak Hour Analysis From 12:00 PM to 05:30 PM - Peak 1 of 1																					
Peak Hour for Entire Intersection Begins at 04:45 PM																					
04:45 PM	0	7	85	0	92	**38**	**296**	**11**	**2**	**347**	**1**	**18**	26	0	45	57	400	**3**	0	460	**944**
05:00 PM	0	**18**	61	0	79	34	270	0	0	304	0	11	40	0	**51**	40	**415**	3	0	458	892
05:15 PM	0	18	102	0	120	20	289	0	2	311	0	10	**41**	0	51	50	379	0	0	429	911
05:30 PM	0	17	**107**	0	**124**	17	264	5	1	287	0	8	28	0	36	**62**	409	0	**1**	**472**	919
Total Volume	0	60	355	0	415	109	1119	16	5	1249	1	47	135	0	183	209	1603	6	1	1819	3666
% App. Total	0	14.5	85.5	0		8.7	89.6	1.3	0.4		0.5	25.7	73.8	0		11.5	88.1	0.3	0.1		
PHF	.000	.833	.829	.000	.837	.717	.945	.364	.625	.900	.250	.653	.823	.000	.897	.843	.966	.500	.250	.963	.971

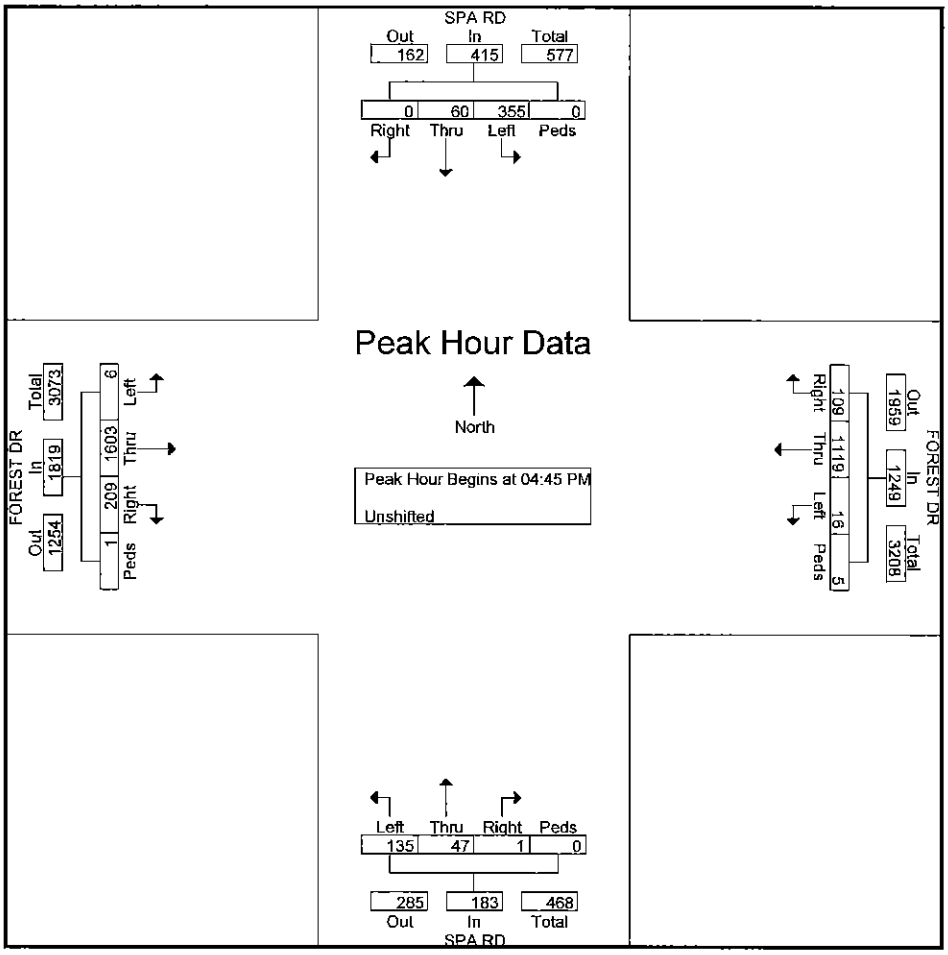

Sabra, Wang & Associates

1504 Joh Avenue
Baltimore, MD 21227

Weather: Clear
Counted By: SWA
Town: Annapolis
County: Anne Arundel

File Name : Forest@Spa_Saturday
Site Code : 00000000
Start Date : 5/14/2011
Page No : 1

Groups Printed- Unshifted

	SPA RD From North				FOREST DR From East				SPA RD From South				FOREST DR From West				
Start Time	Right	Thru	Left	Peds	Right	Thru	Left	Peds	Right	Thru	Left	Peds	Right	Thru	Left	Peds	Int. Total
11:30 AM	2	11	39	1	55	335	1	0	4	16	36	0	16	276	4	0	796
11:45 AM	4	12	61	0	50	301	0	0	3	14	44	0	18	332	2	0	841
Total	6	23	100	1	105	636	1	0	7	30	80	0	34	608	6	0	1637
12:00 PM	12	17	47	0	47	330	3	0	7	11	47	0	30	290	0	0	841
12:15 PM	2	19	54	0	33	296	1	1	2	11	41	0	30	282	1	0	773
Grand Total	20	59	201	1	185	1262	5	1	16	52	168	0	94	1180	7	0	3251
Apprch %	7.1	21	71.5	0.4	12.7	86.9	0.3	0.1	6.8	22	71.2	0	7.3	92.1	0.5	0	
Total %	0.6	1.8	6.2	0	5.7	38.8	0.2	0	0.5	1.6	5.2	0	2.9	36.3	0.2	0	

Sabra, Wang & Associates

1504 Joh Avenue
Baltimore, MD 21227

File Name : Forest@Spa_Saturday
Site Code : 00000000
Start Date : 5/14/2011
Page No : 2

	SPA RD From North					FOREST DR From East					SPA RD From South					FOREST DR From West					
Start Time	Right	Thru	Left	Peds	App. Total	Right	Thru	Left	Peds	App. Total	Right	Thru	Left	Peds	App. Total	Right	Thru	Left	Peds	App. Total	Int. Total
Peak Hour Analysis From 11:30 AM to 12:15 PM - Peak 1 of 1																					
Peak Hour for Entire Intersection Begins at 11:30 AM																					
11:30 AM	2	11	39	1	53	55	335	1	0	391	4	16	36	0	56	16	276	4	0	296	796
11:45 AM	4	12	61	0	77	50	301	0	0	351	3	14	44	0	61	18	332	2	0	352	841
12:00 PM	12	17	47	0	76	47	330	3	0	380	7	11	47	0	65	30	290	0	0	320	841
12:15 PM	2	19	54	0	75	33	296	1	1	331	2	11	41	0	54	30	282	1	0	313	773
Total Volume	20	59	201	1	281	185	1262	5	1	1453	16	52	168	0	236	94	1180	7	0	1281	3251
% App. Total	7.1	21	71.5	0.4		12.7	86.9	0.3	0.1		6.8	22	71.2	0		7.3	92.1	0.5	0		
PHF	.417	.776	.824	.250	.912	.841	.942	.417	.250	.929	.571	.813	.894	.000	.908	.783	.889	.438	.000	.910	.966

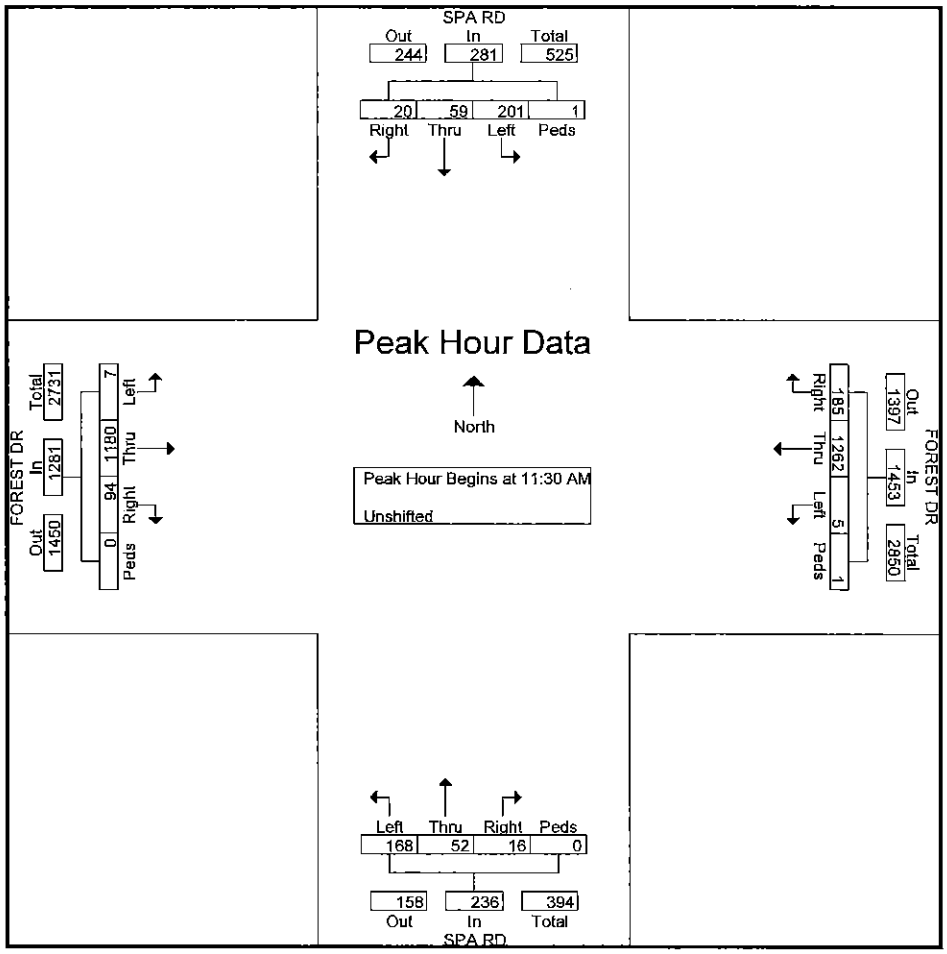

Sabra, Wang & Associates

1504 Joh Avenue
Baltimore, MD 21227

Weather: Clear
Counted By: SWA
Town: Annapolis
County: Anne Arundel

File Name : Forest@Gemini_Weekday
Site Code : 00000000
Start Date : 5/18/2011 (w)
Page No : 1

Groups Printed- Unshifted

	GEMINI DR From North				FOREST DR From East				GEMINI DR From South				FOREST DR From West				
Start Time	Right	Thru	Left	Peds	Right	Thru	Left	Peds	Right	Thru	Left	Peds	Right	Thru	Left	Peds	Int. Total
07:45 AM	39	0	2	0	2	467	0	1	0	0	1	0	1	302	26	0	841
Total	39	0	2	0	2	467	0	1	0	0	1	0	1	302	26	0	841
08:00 AM	47	0	6	0	3	427	1	2	0	0	0	0	0	284	16	0	786
08:15 AM	21	0	8	0	2	436	0	0	0	0	0	0	1	313	28	0	809
08:30 AM	25	0	6	0	2	450	0	0	0	0	0	0	2	300	9	0	794
Total	93	0	20	0	7	1313	1	2	0	0	0	0	3	897	53	0	2389
04:45 PM	14	0	5	0	7	329	0	1	0	0	0	0	0	442	29	0	827
Total	14	0	5	0	7	329	0	1	0	0	0	0	0	442	29	0	827
05:00 PM	30	0	6	0	8	322	0	1	0	0	0	0	0	426	42	0	835
05:15 PM	13	0	8	1	2	283	0	2	0	0	0	0	0	412	29	0	750
05:30 PM	16	0	6	0	1	284	0	0	1	0	0	0	0	402	26	0	736
Grand Total	205	0	47	1	27	2998	1	7	1	0	1	0	4	2881	205	0	6378
Apprch %	81	0	18.6	0.4	0.9	98.8	0	0.2	50	0	50	0	0.1	93.2	6.6	0	
Total %	3.2	0	0.7	0	0.4	47	0	0.1	0	0	0	0	0.1	45.2	3.2	0	

Sabra, Wang & Associates

1504 Joh Avenue
Baltimore, MD 21227

File Name : Forest@Gemini_Weekday
Site Code : 00000000
Start Date : 5/18/2011
Page No : 2

	GEMINI DR From North					FOREST DR From East					GEMINI DR From South					FOREST DR From West					
Start Time	Right	Thru	Left	Peds	App. Total	Right	Thru	Left	Peds	App. Total	Right	Thru	Left	Peds	App. Total	Right	Thru	Left	Peds	App. Total	Int. Total
Peak Hour Analysis From 07:45 AM to 11:45 AM - Peak 1 of 1																					
Peak Hour for Entire Intersection Begins at 07:45 AM																					
07:45 AM	39	0	2	0	41	2	467	0	1	470	0	0	1	0	1	1	302	26	0	329	841
08:00 AM	47	0	6	0	53	3	427	1	2	433	0	0	0	0	0	0	284	16	0	300	786
08:15 AM	21	0	8	0	29	2	436	0	0	438	0	0	0	0	0	1	313	28	0	342	809
08:30 AM	25	0	6	0	31	2	450	0	0	452	0	0	0	0	0	2	300	9	0	311	794
Total Volume	132	0	22	0	154	9	1780	1	3	1793	0	0	1	0	1	4	1199	79	0	1282	3230
% App. Total	85.7	0	14.3	0		0.5	99.3	0.1	0.2		0	0	100	0		0.3	93.5	6.2	0		
PHF	.702	.000	.688	.000	.726	.750	.953	.250	.375	.954	.000	.000	.250	.000	.250	.500	.958	.705	.000	.937	.960

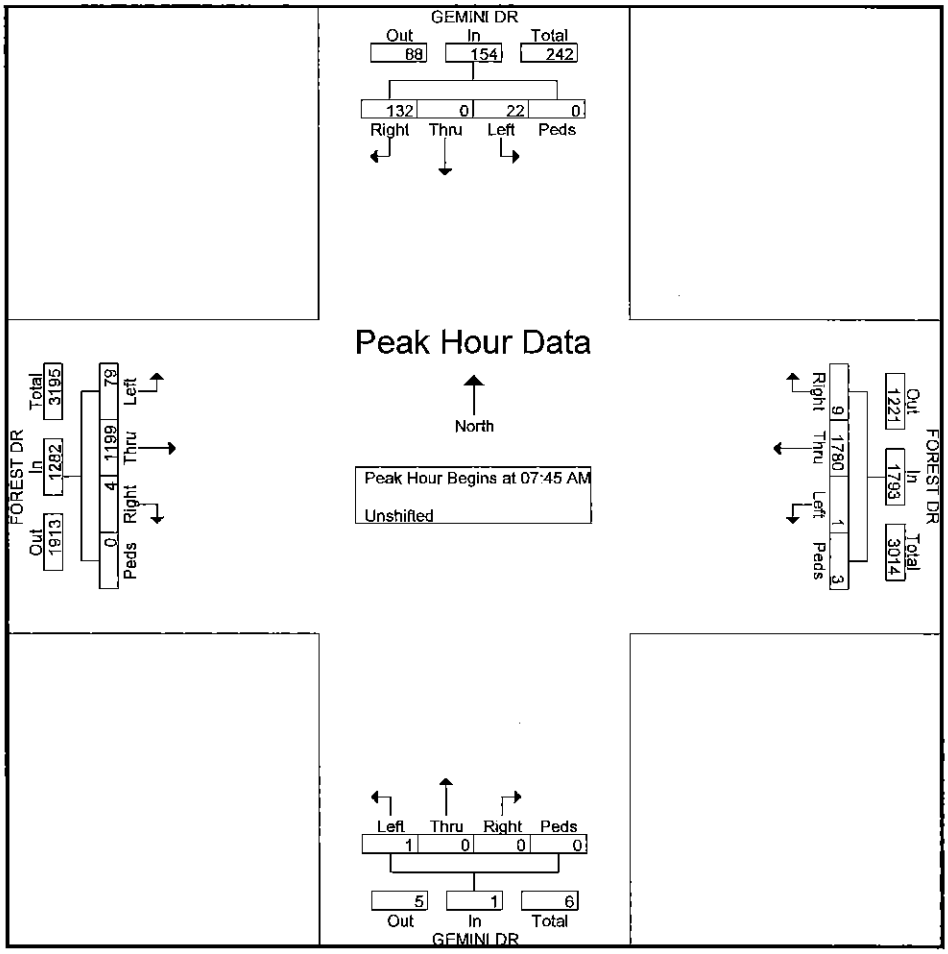

Sabra, Wang & Associates

1504 Joh Avenue
Baltimore, MD 21227

File Name : Forest@Gemini_Weekday
Site Code : 00000000
Start Date : 5/18/2011
Page No : 3

	GEMINI DR From North					FOREST DR From East					GEMINI DR From South					FOREST DR From West					
Start Time	Right	Thru	Left	Peds	App. Total	Right	Thru	Left	Peds	App. Total	Right	Thru	Left	Peds	App. Total	Right	Thru	Left	Peds	App. Total	Int. Total
Peak Hour Analysis From 12:00 PM to 05:30 PM - Peak 1 of 1																					
Peak Hour for Entire Intersection Begins at 04:45 PM																					
04:45 PM	14	0	5	0	19	7	**329**	0	**1**	**337**	0	0	0	0	0	0	**442**	29	0	**471**	827
05:00 PM	**30**	0	6	0	**36**	**8**	322	0	**1**	331	0	0	0	0	0	0	426	**42**	0	468	**835**
05:15 PM	13	0	**8**	**1**	22	2	283	0	**2**	287	0	0	0	0	0	0	412	29	0	441	750
05:30 PM	**16**	0	6	0	22	1	284	0	0	285	**1**	0	0	0	**1**	0	402	26	0	428	736
Total Volume	73	0	25	1	99	18	1218	0	4	1240	1	0	0	0	1	0	1682	126	0	1808	3148
% App. Total	73.7	0	25.3	1		1.5	98.2	0	0.3		100	0	0	0		0	93	7	0		
PHF	.608	.000	.781	.250	.688	.563	.926	.000	.500	.920	.250	.000	.000	.000	.250	.000	.951	.750	.000	.960	.943

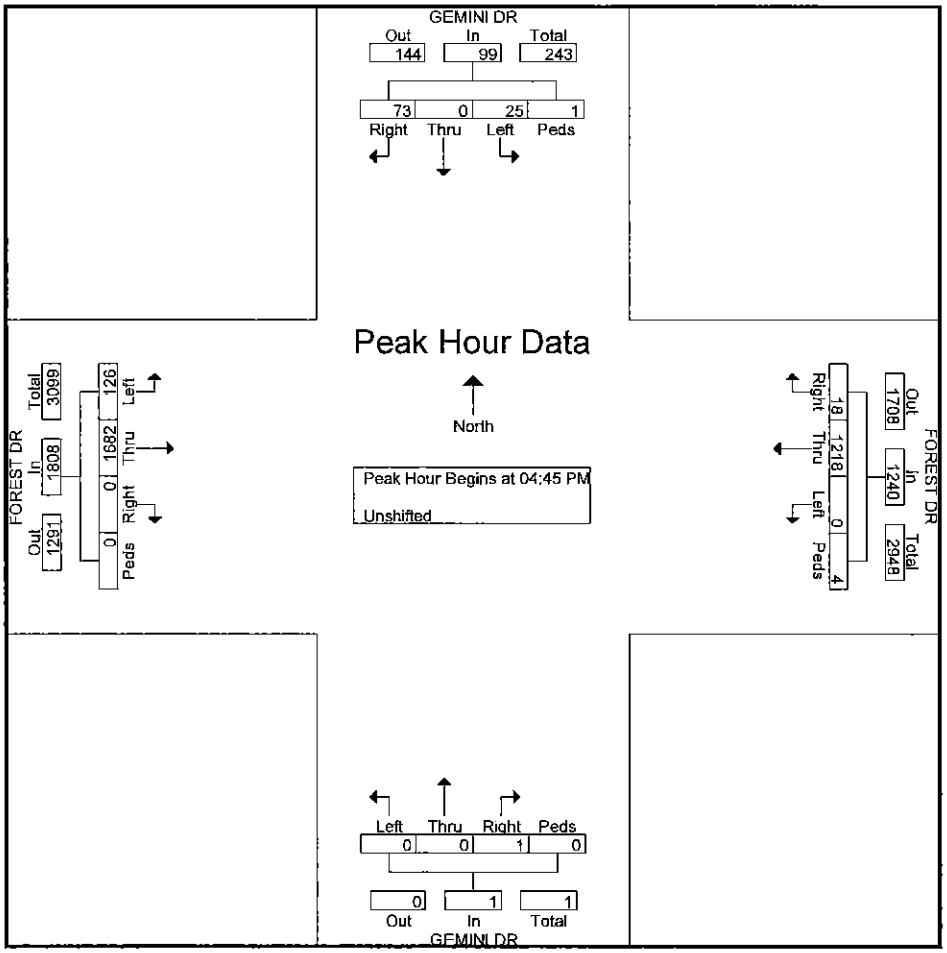

Sabra, Wang & Associates

1504 Joh Avenue
Baltimore, MD 21227

Weather: Clear
Counted By: SWA
Town: Annapolis
County: Anne Arundel

File Name : Forest@Gemini_SAT
Site Code : 00000000
Start Date : 5/14/2011
Page No : 1

Groups Printed- Unshifted

	GEMINI DR From North				FOREST DR From East				GEMINI DR From South				FOREST DR From West				
Start Time	Right	Thru	Left	Peds	Right	Thru	Left	Peds	Right	Thru	Left	Peds	Right	Thru	Left	Peds	Int. Total
11:30 AM	27	0	10	0	6	353	0	0	0	0	0	0	0	347	22	0	765
11:45 AM	14	0	9	0	9	393	0	0	0	0	0	0	0	338	34	0	797
Total	41	0	19	0	15	746	0	0	0	0	0	0	0	685	56	0	1562
12:00 PM	21	0	10	0	6	332	0	0	0	0	0	0	0	310	32	0	711
12:15 PM	25	0	10	0	5	308	0	0	0	0	0	0	0	328	26	0	702
Grand Total	87	0	39	0	26	1386	0	0	0	0	0	0	0	1323	114	0	2975
Apprch %	69	0	31	0	1.8	98.2	0	0	0	0	0	0	0	92.1	7.9	0	
Total %	2.9	0	1.3	0	0.9	46.6	0	0	0	0	0	0	0	44.5	3.8	0	

Sabra, Wang & Associates

1504 Joh Avenue
Baltimore, MD 21227

File Name : Forest@Gemini_SAT
Site Code : 00000000
Start Date : 5/14/2011
Page No : 2

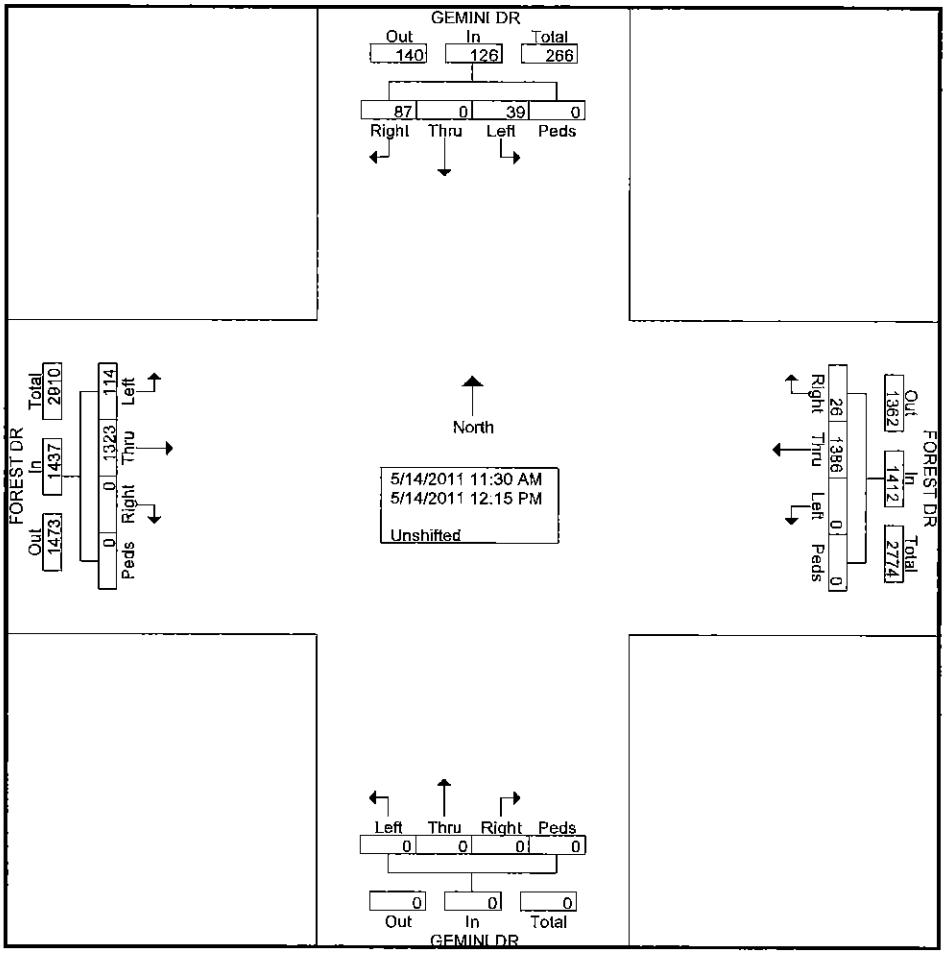

Sabra, Wang & Associates

1504 Joh Avenue
Baltimore, MD 21227

Weather: Clear
Counted By: SWA
Town: Annapolis
County: Anne Arundel

File Name : Forest@Youngs_Weekday
Site Code : 00000000
Start Date : 5/19/2011 (R)
Page No : 1

Groups Printed- Unshifted

	Youngs Farm Rd From North				FOREST DR From East				Youngs Farm Rd From South				FOREST DR From West				
Start Time	Right	Thru	Left	Peds	Right	Thru	Left	Peds	Right	Thru	Left	Peds	Right	Thru	Left	Peds	Int. Total
07:45 AM	6	0	3	2	19	420	0	0	3	0	7	0	0	325	0	0	785
Total	6	0	3	2	19	420	0	0	3	0	7	0	0	325	0	0	785
08:00 AM	2	0	5	0	18	437	0	0	1	0	2	0	0	313	2	0	780
08:15 AM	3	0	2	0	18	470	0	0	0	0	0	0	0	312	4	0	809
08:30 AM	0	0	5	0	13	458	6	0	8	0	0	0	0	301	0	0	791
Total	5	0	12	0	49	1365	6	0	9	0	2	0	0	926	6	0	2380
04:45 PM	4	0	4	1	1	360	0	0	0	0	0	0	0	430	16	0	816
Total	4	0	4	1	1	360	0	0	0	0	0	0	0	430	16	0	816
05:00 PM	2	0	0	2	8	353	0	0	0	0	0	1	0	490	16	0	872
05:15 PM	2	0	4	0	4	324	0	0	1	0	0	0	0	448	14	0	797
05:30 PM	4	1	4	0	0	302	0	0	0	0	0	0	0	407	23	0	741
Grand Total	23	1	27	5	81	3124	6	0	13	0	9	1	0	3026	75	0	6391
Apprch %	41.1	1.8	48.2	8.9	2.5	97.3	0.2	0	56.5	0	39.1	4.3	0	97.6	2.4	0	
Total %	0.4	0	0.4	0.1	1.3	48.9	0.1	0	0.2	0	0.1	0	0	47.3	1.2	0	

Sabra, Wang & Associates

1504 Joh Avenue
Baltimore, MD 21227

File Name : Forest@Youngs_Weekday
Site Code : 00000000
Start Date : 5/19/2011
Page No : 2

	Youngs Farm Rd From North					FOREST DR From East					Youngs Farm Rd From South					FOREST DR From West					
Start Time	Right	Thru	Left	Peds	App. Total	Right	Thru	Left	Peds	App. Total	Right	Thru	Left	Peds	App. Total	Right	Thru	Left	Peds	App. Total	Int. Total
Peak Hour Analysis From 07:45 AM to 11:45 AM - Peak 1 of 1																					
Peak Hour for Entire Intersection Begins at 07:45 AM																					
07:45 AM	**6**	0	3	**2**	**11**	**19**	420	0	0	439	3	0	7	0	**10**	0	**325**	**0**	**0**	**325**	785
08:00 AM	2	0	**5**	0	7	**18**	437	0	0	455	**1**	0	2	0	3	0	313	2	0	315	780
08:15 AM	3	0	2	0	5	**18**	**470**	0	0	**488**	0	0	0	0	0	0	312	**4**	0	316	**809**
08:30 AM	0	0	5	0	5	13	458	**6**	0	477	**8**	0	0	0	8	0	301	**0**	0	301	791
Total Volume	11	0	15	2	28	68	1785	6	0	1859	12	0	9	0	21	0	1251	6	0	1257	3165
% App. Total	39.3	0	53.6	7.1		3.7	96	0.3	0		57.1	0	42.9	0		0	99.5	0.5	0		
PHF	.458	.000	.750	.250	.636	.895	.949	.250	.000	.952	.375	.000	.321	.000	.525	.000	.962	.375	.000	.967	.978

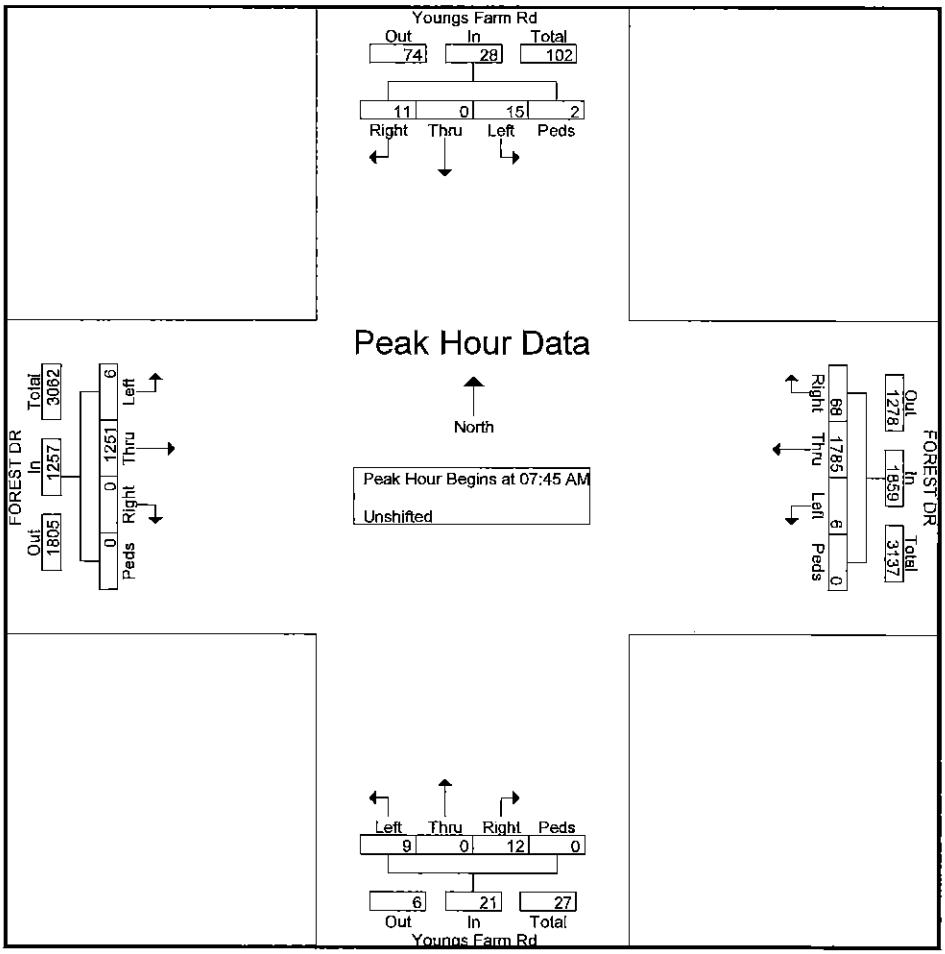

Sabra, Wang & Associates

1504 Joh Avenue
Baltimore, MD 21227

File Name : Forest@Youngs_Weekday
Site Code : 00000000
Start Date : 5/19/2011
Page No : 3

	Youngs Farm Rd From North					FOREST DR From East					Youngs Farm Rd From South					FOREST DR From West					
Start Time	Right	Thru	Left	Peds	App. Total	Right	Thru	Left	Peds	App. Total	Right	Thru	Left	Peds	App. Total	Right	Thru	Left	Peds	App. Total	Int. Total
Peak Hour Analysis From 12:00 PM to 05:30 PM - Peak 1 of 1																					
Peak Hour for Entire Intersection Begins at 04:45 PM																					
04:45 PM	**4**	0	**4**	**1**	**9**	**1**	**360**	0	0	**361**	0	0	0	0	0	0	430	16	0	446	816
05:00 PM	2	0	0	**2**	4	**8**	353	0	0	361	0	0	0	**1**	1	0	**490**	16	0	**506**	**872**
05:15 PM	2	0	4	0	6	4	324	0	0	328	**1**	0	0	0	1	0	448	14	0	462	797
05:30 PM	4	**1**	4	0	9	0	302	0	0	302	0	0	0	0	0	0	407	**23**	0	430	741
Total Volume	12	1	12	3	28	13	1339	0	0	1352	**1**	0	0	1	2	0	1775	69	0	1844	3226
% App. Total	42.9	3.6	42.9	10.7		1	99	0	0		50	0	0	50		0	96.3	3.7	0		
PHF	.750	.250	.750	.375	.778	.406	.930	.000	.000	.936	.250	.000	.000	.250	.500	.000	.906	.750	.000	.911	.925

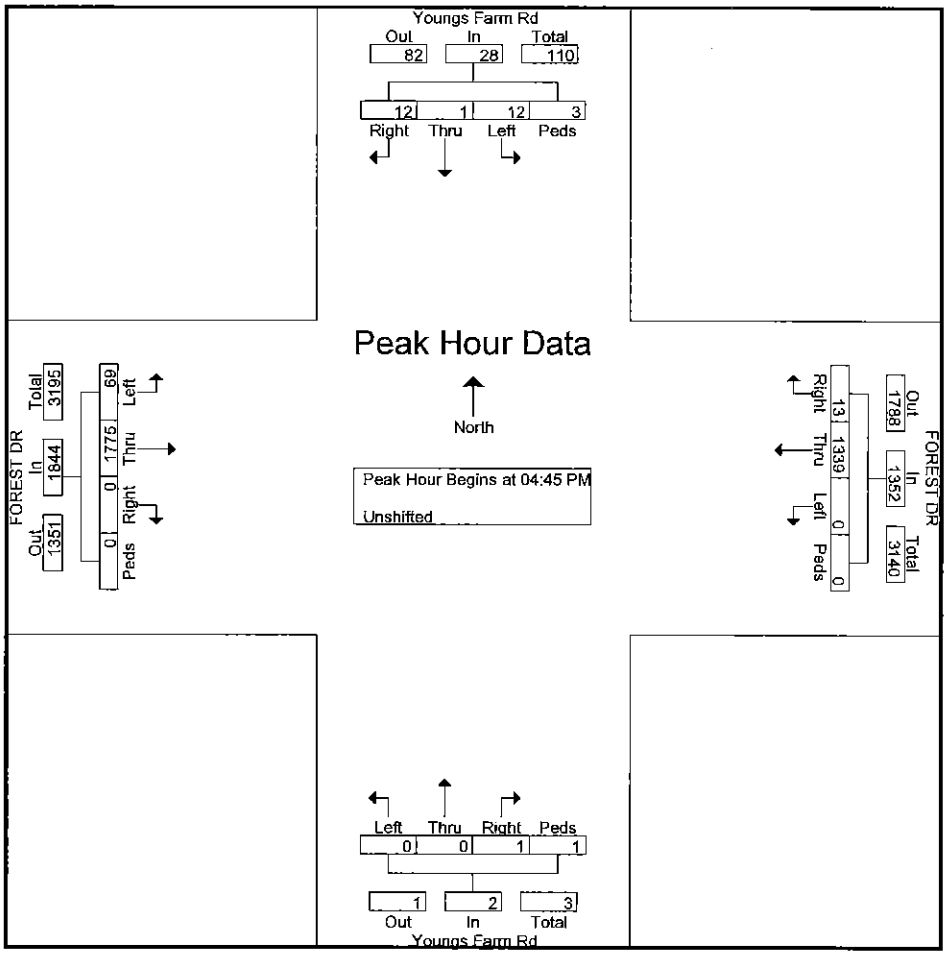

Sabra, Wang & Associates

1504 Joh Avenue
Baltimore, MD 21227

Weather: Clear
Counted By: SWA
Town: Annapolis
County: Anne Arundel

File Name : Forest@Youngs_SAT
Site Code : 00000000
Start Date : 5/14/2011
Page No : 1

Groups Printed- Unshifted

	FOREST DR From North				YOUNGSFARM RD From East				FOREST DR From South				YOUNGSFARM RD From West				
Start Time	Right	Thru	Left	Peds	Right	Thru	Left	Peds	Right	Thru	Left	Peds	Right	Thru	Left	Peds	Int. Total
11:30 AM	15	0	2	1	2	383	0	0	2	0	3	0	0	302	11	0	721
11:45 AM	8	0	1	0	7	350	0	0	0	0	1	0	0	309	7	0	683
Total	23	0	3	1	9	733	0	0	2	0	4	0	0	611	18	0	1404
12:00 PM	6	0	5	2	2	361	0	3	0	0	0	0	0	331	4	0	714
12:15 PM	7	0	7	0	1	320	0	0	0	0	0	0	3	294	5	0	637
Grand Total	36	0	15	3	12	1414	0	3	2	0	4	0	3	1236	27	0	2755
Apprch %	66.7	0	27.8	5.6	0.8	99	0	0.2	33.3	0	66.7	0	0.2	97.6	2.1	0	
Total %	1.3	0	0.5	0.1	0.4	51.3	0	0.1	0.1	0	0.1	0	0.1	44.9	1	0	

Sabra, Wang & Associates

1504 Joh Avenue
Baltimore, MD 21227

File Name : Forest@Youngs_SAT
Site Code : 00000000
Start Date : 5/14/2011
Page No : 2

	FOREST DR From North					YOUNGSFARM RD From East					FOREST DR From South					YOUNGSFARM RD From West					
Start Time	Right	Thru	Left	Peds	App. Total	Right	Thru	Left	Peds	App. Total	Right	Thru	Left	Peds	App. Total	Right	Thru	Left	Peds	App. Total	Int. Total
Peak Hour Analysis From 11:30 AM to 12:15 PM - Peak 1 of 1																					
Peak Hour for Entire Intersection Begins at 11:30 AM																					
11:30 AM	**15**	0	2	1	**18**	2	**383**	0	0	**385**	**2**	0	**3**	0	**5**	0	302	**11**	0	313	**721**
11:45 AM	8	0	1	0	9	7	350	0	0	357	0	0	1	0	1	0	309	7	0	316	683
12:00 PM	6	0	5	2	13	2	361	0	3	366	0	0	0	0	0	0	**331**	4	0	**335**	714
12:15 PM	7	0	7	0	14	1	320	0	0	321	0	0	0	0	0	3	294	5	0	302	637
Total Volume	36	0	15	3	54	12	1414	0	3	1429	2	0	4	0	6	3	1236	27	0	1266	2755
% App. Total	66.7	0	27.8	5.6		0.8	99	0	0.2		33.3	0	66.7	0		0.2	97.6	2.1	0		
PHF	.600	.000	.536	.375	.750	.429	.923	.000	.250	.928	.250	.000	.333	.000	.300	.250	.934	.614	.000	.945	.955

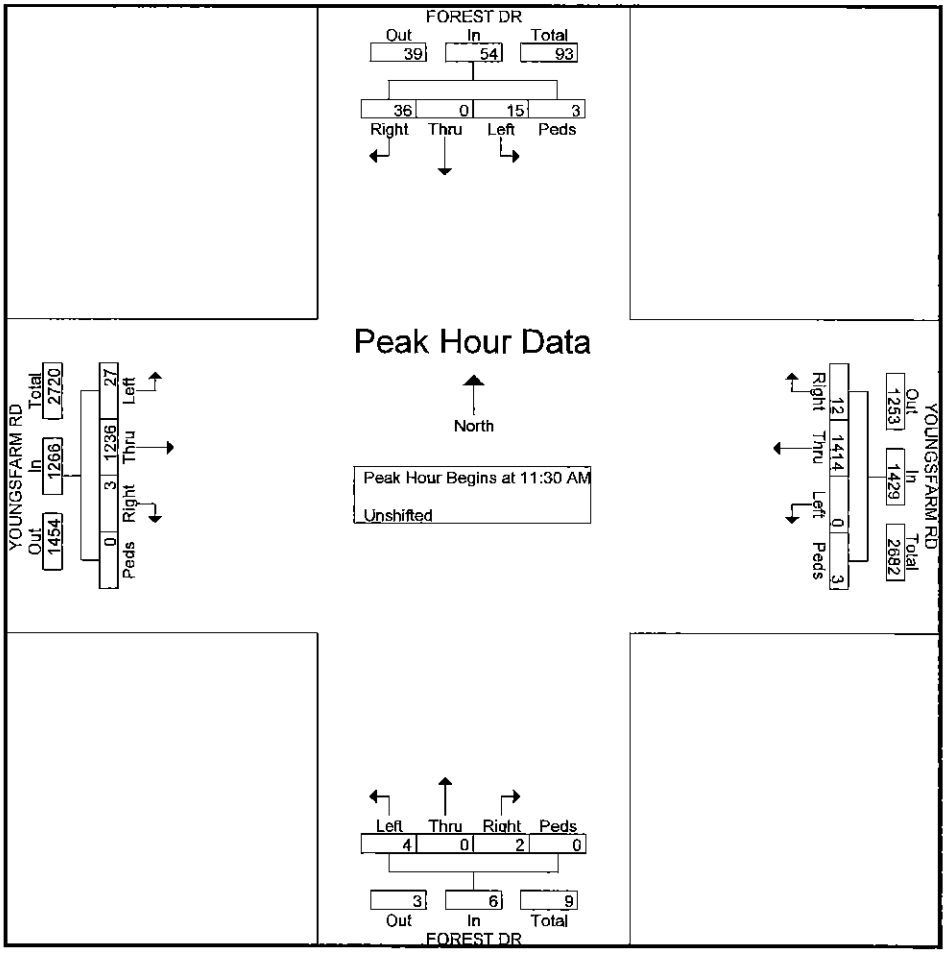

Sabra, Wang & Associates

1504 Joh Avenue
Baltimore, MD 21227

Weather: Clear
Counted By: SWA
Town: Annapolis
County: Anne Arundel

File Name : Forest@Tyler_Weekday
Site Code : 00000000
Start Date : 5/17/2011 (T)
Page No : 1

Groups Printed- Unshifted

	TYLER AVE From North				FOREST DR From East				TYLER AVE From South				FOREST AVE From West				
Start Time	Right	Thru	Left	Peds	Right	Thru	Left	Peds	Right	Thru	Left	Peds	Right	Thru	Left	Peds	Int. Total
07:45 AM	27	4	4	0	2	386	2	0	2	14	11	0	8	224	23	2	709
Total	27	4	4	0	2	386	2	0	2	14	11	0	8	224	23	2	709
08:00 AM	23	0	7	0	1	394	1	0	0	4	5	0	2	336	30	0	803
08:15 AM	29	2	6	0	1	381	2	3	3	1	11	1	4	224	45	0	713
08:30 AM	22	1	7	0	3	353	3	0	5	1	12	0	5	199	23	1	635
Total	74	3	20	0	5	1128	6	3	8	6	28	1	11	759	98	1	2151
04:45 PM	27	0	1	0	2	260	1	0	4	0	1	0	6	403	1	0	706
Total	27	0	1	0	2	260	1	0	4	0	1	0	6	403	1	0	706
05:00 PM	11	3	11	1	6	292	4	3	5	2	2	0	5	364	18	1	728
05:15 PM	16	3	5	0	6	289	7	0	3	3	8	0	2	372	21	0	735
05:30 PM	12	4	11	0	1	274	2	1	1	2	14	0	6	393	30	0	751
Grand Total	167	17	52	1	22	2629	22	7	23	27	64	1	38	2515	191	4	5780
Apprch %	70.5	7.2	21.9	0.4	0.8	98.1	0.8	0.3	20	23.5	55.7	0.9	1.4	91.5	7	0.1	
Total %	2.9	0.3	0.9	0	0.4	45.5	0.4	0.1	0.4	0.5	1.1	0	0.7	43.5	3.3	0.1	

Sabra, Wang & Associates

1504 Joh Avenue
Baltimore, MD 21227

File Name : Forest@Tyler_Weekday
Site Code : 00000000
Start Date : 5/17/2011
Page No : 2

	TYLER AVE From North					FOREST DR From East					TYLER AVE From South					FOREST AVE From West					
Start Time	Right	Thru	Left	Peds	App. Total	Right	Thru	Left	Peds	App. Total	Right	Thru	Left	Peds	App. Total	Right	Thru	Left	Peds	App. Total	Int. Total
Peak Hour Analysis From 07:45 AM to 11:45 AM - Peak 1 of 1																					
Peak Hour for Entire Intersection Begins at 07:45 AM																					
07:45 AM	27	4	4	0	35	2	386	2	0	390	2	14	11	0	27	8	224	23	2	257	709
08:00 AM	23	0	7	0	30	1	394	1	0	396	0	4	5	0	9	2	336	30	0	368	803
08:15 AM	29	2	6	0	37	1	381	2	3	387	3	1	11	1	16	4	224	45	0	273	713
08:30 AM	22	1	7	0	30	3	353	3	0	359	5	1	12	0	18	5	199	23	1	228	635
Total Volume	101	7	24	0	132	7	1514	8	3	1532	10	20	39	1	70	19	983	121	3	1126	2860
% App. Total	76.5	5.3	18.2	0		0.5	98.8	0.5	0.2		14.3	28.6	55.7	1.4		1.7	87.3	10.7	0.3		
PHF	.871	.438	.857	.000	.892	.583	.961	.667	.250	.967	.500	.357	.813	.250	.648	.594	.731	.672	.375	.765	.890

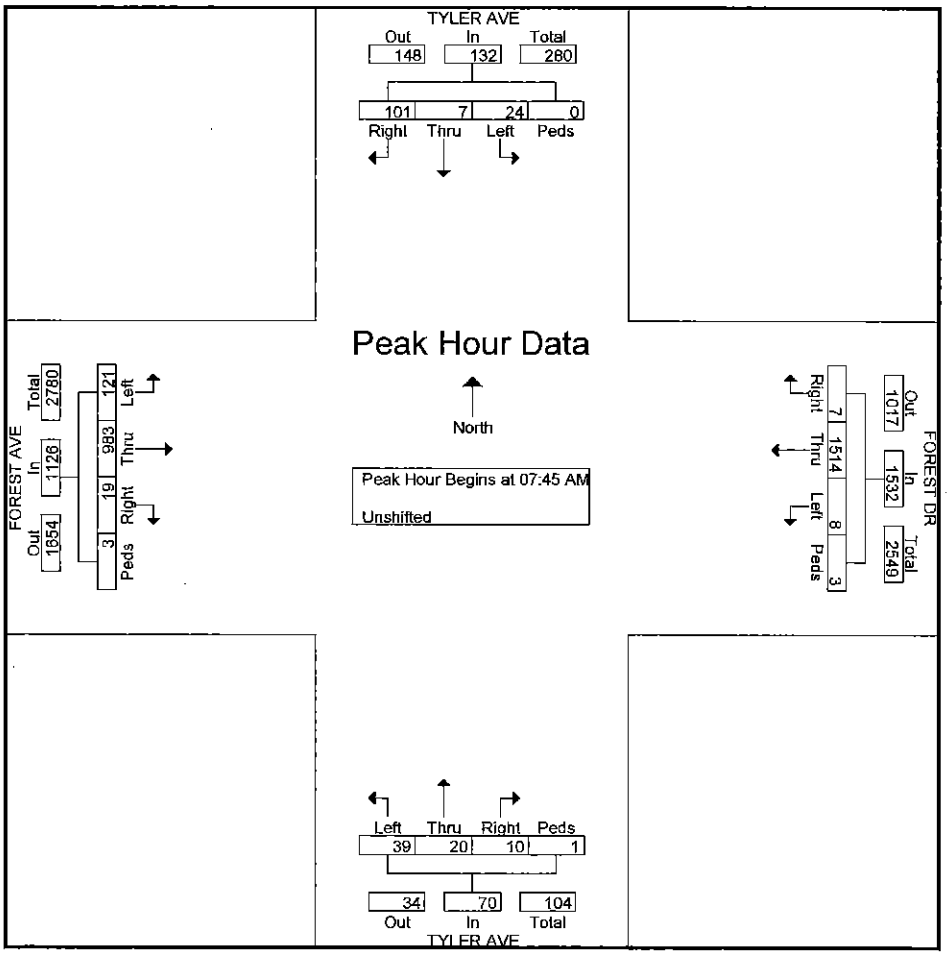

Sabra, Wang & Associates

1504 Joh Avenue
Baltimore, MD 21227

File Name : Forest@Tyler_Weekday
Site Code : 00000000
Start Date : 5/17/2011
Page No : 3

	TYLER AVE From North					FOREST DR From East					TYLER AVE From South					FOREST AVE From West					
Start Time	Right	Thru	Left	Peds	App. Total	Right	Thru	Left	Peds	App. Total	Right	Thru	Left	Peds	App. Total	Right	Thru	Left	Peds	App. Total	Int. Total
Peak Hour Analysis From 12:00 PM to 05:30 PM - Peak 1 of 1																					
Peak Hour for Entire Intersection Begins at 04:45 PM																					
04:45 PM	27	0	1	0	28	2	260	1	0	263	4	0	1	0	5	6	403	1	0	410	706
05:00 PM	11	3	11	1	26	6	292	4	3	305	5	2	2	0	9	5	364	18	1	388	728
05:15 PM	16	3	5	0	24	6	289	7	0	302	3	3	8	0	14	2	372	21	0	395	735
05:30 PM	12	4	11	0	27	1	274	2	1	278	1	2	14	0	17	6	393	30	0	429	751
Total Volume	66	10	28	1	105	15	1115	14	4	1148	13	7	25	0	45	19	1532	70	1	1622	2920
% App. Total	62.9	9.5	26.7	1		1.3	97.1	1.2	0.3		28.9	15.6	55.6	0		1.2	94.5	4.3	0.1		
PHF	.611	.625	.636	.250	.938	.625	.955	.500	.333	.941	.650	.583	.446	.000	.662	.792	.950	.583	.250	.945	.972

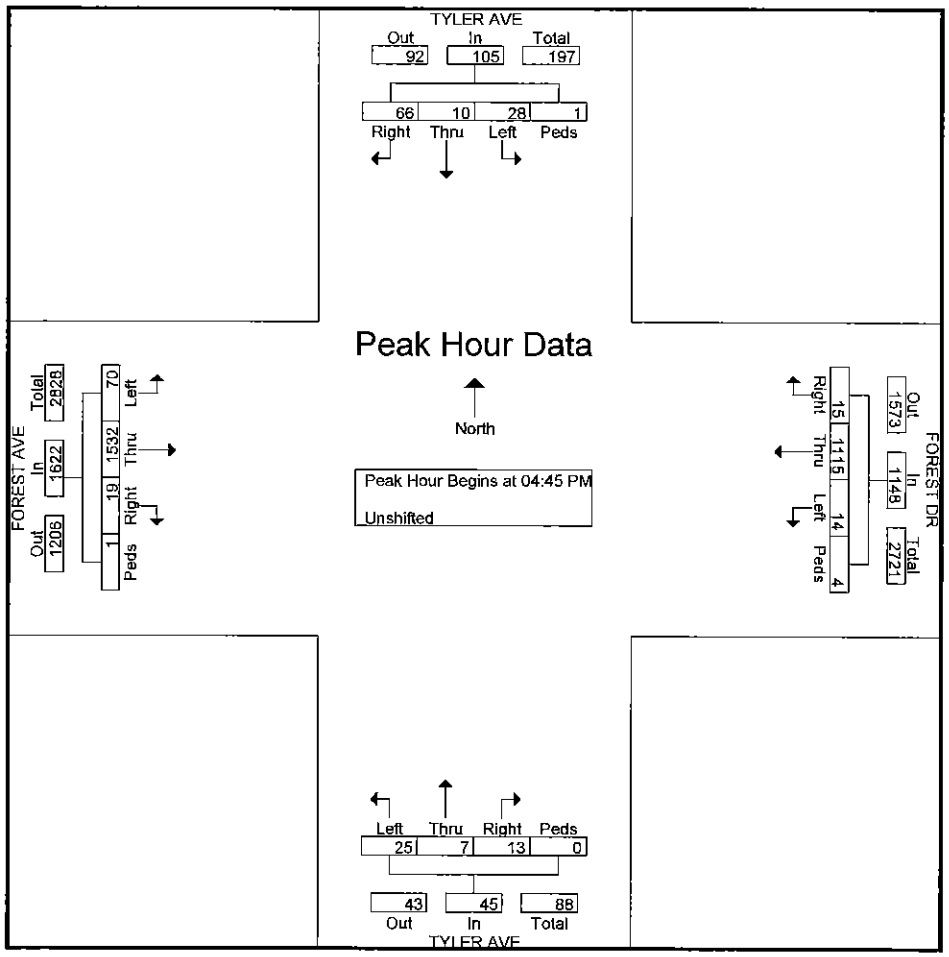

Sabra, Wang & Associates

1504 Joh Avenue
Baltimore, MD 21227

Weather: Clear
Counted By: SWA
Town: Annapolis
County: Anne Arundel

File Name : Forest@Tyler_SAT
Site Code : 00000000
Start Date : 5/21/2011
Page No : 1

Groups Printed- Unshifted

	TYLER AVE From North				FOREST DR From East				TYLER AVE From South				FOREST DR From West				
Start Time	Right	Thru	Left	Peds	Right	Thru	Left	Peds	Right	Thru	Left	Peds	Right	Thru	Left	Peds	Int. Total
11:30 AM	26	1	7	0	9	321	9	0	3	4	15	0	10	302	22	0	729
11:45 AM	24	1	9	6	8	362	5	3	2	4	12	4	8	298	27	0	773
Total	50	2	16	6	17	683	14	3	5	8	27	4	18	600	49	0	1502
12:00 PM	15	4	7	0	4	371	3	0	2	2	7	0	15	297	20	0	747
12:15 PM	21	4	5	4	7	313	6	4	2	5	15	2	19	273	20	0	700
Grand Total	86	10	28	10	28	1367	23	7	9	15	49	6	52	1170	89	0	2949
Apprch %	64.2	7.5	20.9	7.5	2	95.9	1.6	0.5	11.4	19	62	7.6	4	89.2	6.8	0	
Total %	2.9	0.3	0.9	0.3	0.9	46.4	0.8	0.2	0.3	0.5	1.7	0.2	1.8	39.7	3	0	

Sabra, Wang & Associates

1504 Joh Avenue
Baltimore, MD 21227

File Name : Forest@Tyler_SAT
Site Code : 00000000
Start Date : 5/21/2011
Page No : 2

	TYLER AVE From North					FOREST DR From East					TYLER AVE From South					FOREST DR From West					
Start Time	Right	Thru	Left	Peds	App. Total	Right	Thru	Left	Peds	App. Total	Right	Thru	Left	Peds	App. Total	Right	Thru	Left	Peds	App. Total	Int. Total
Peak Hour Analysis From 11:30 AM to 12:15 PM - Peak 1 of 1																					
Peak Hour for Entire Intersection Begins at 11:30 AM																					
11:30 AM	26	1	7	0	34	9	321	9	0	339	3	4	15	0	22	10	302	22	0	334	729
11:45 AM	24	1	9	6	40	8	362	5	3	378	2	4	12	4	22	8	298	27	0	333	773
12:00 PM	15	4	7	0	26	4	371	3	0	378	2	2	7	0	11	15	297	20	0	332	747
12:15 PM	21	4	5	4	34	7	313	6	4	330	2	5	15	2	24	19	273	20	0	312	700
Total Volume	86	10	28	10	134	28	1367	23	7	1425	9	15	49	6	79	52	1170	89	0	1311	2949
% App. Total	64.2	7.5	20.9	7.5		2	95.9	1.6	0.5		11.4	19	62	7.6		4	89.2	6.8	0		
PHF	.827	.625	.778	.417	.838	.778	.921	.639	.438	.942	.750	.750	.817	.375	.823	.684	.969	.824	.000	.981	.954

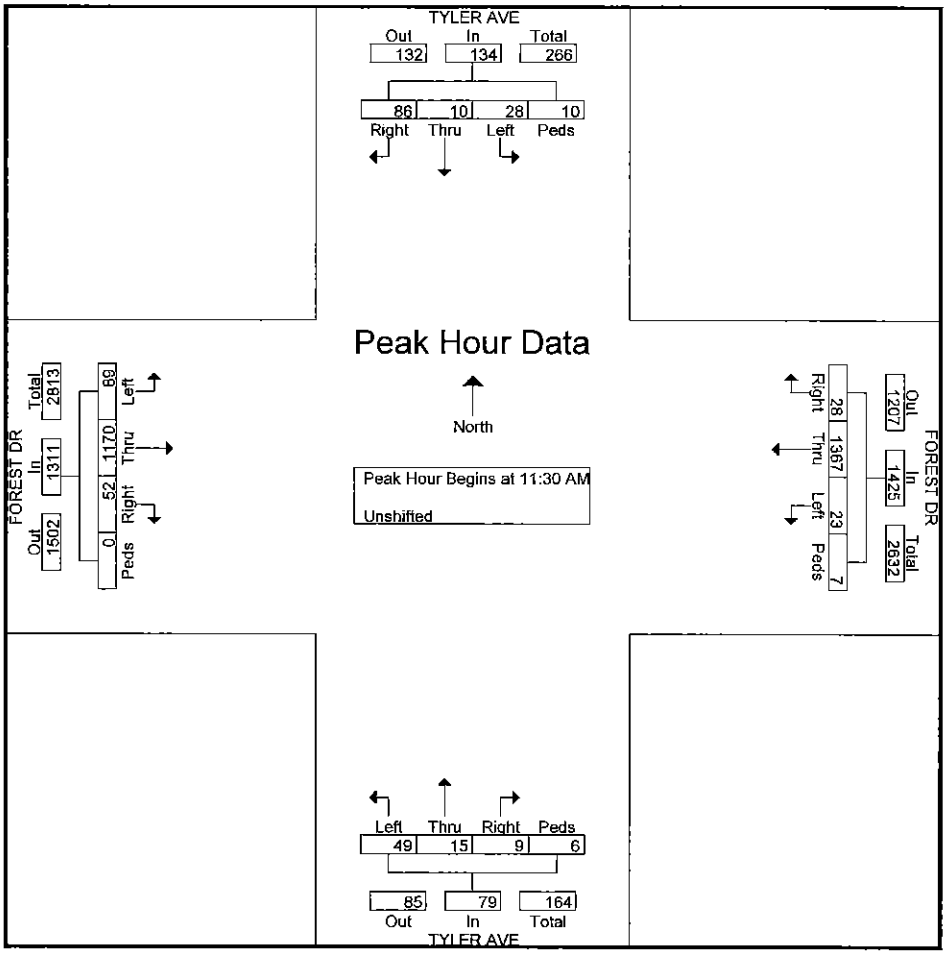

Sabra, Wang & Associates

1504 Joh Avenue
Baltimore, MD 21227

Weather: Clear
Counted By: SWA
Town: Annapolis
County: Anne Arundel

File Name : Bay Ridge@Hillsmere_Weekday
Site Code : 00000000
Start Date : 5/18/2011 (W)
Page No : 1

Groups Printed- Unshifted

	Bay Ridge Ave From North					Forest Dr From East					Hillsmere Rd From South					Forest Dr From West					
Start Time	Right	Thru	Left	Peds	App. Total	Right	Thru	Left	Peds	App. Total	Right	Thru	Left	Peds	App. Total	Right	Thru	Left	Peds	App. Total	Int. Total
07:45 AM	7	30	62	0	99	76	287	17	0	380	8	21	78	0	107	73	153	7	0	233	819
Total	7	30	62	0	99	76	287	17	0	380	8	21	78	0	107	73	153	7	0	233	819
08:00 AM	13	22	68	0	103	58	268	48	0	374	16	23	98	0	137	112	173	7	0	292	906
08:15 AM	18	24	50	0	92	58	228	31	0	317	44	38	161	0	243	99	178	7	0	284	936
08:30 AM	21	30	63	1	115	51	257	22	1	331	33	35	125	0	193	54	174	12	0	240	879
Total	52	76	181	1	310	167	753	101	1	1022	93	96	384	0	573	265	525	26	0	816	2721
04:45 PM	7	42	100	3	152	54	186	15	0	255	23	33	71	0	127	110	256	4	0	370	904
Total	7	42	100	3	152	54	186	15	0	255	23	33	71	0	127	110	256	4	0	370	904
05:00 PM	6	52	100	1	159	72	174	26	2	274	33	24	87	0	144	124	252	8	1	385	962
05:15 PM	2	38	104	0	144	62	194	26	0	282	19	35	95	2	151	92	296	2	0	390	967
05:30 PM	5	43	94	1	143	44	171	18	0	233	25	32	53	1	111	71	276	7	0	354	841
Grand Total	79	281	641	6	1007	475	1765	203	3	2446	201	241	768	3	1213	735	1758	54	1	2548	7214
Apprch %	7.8	27.9	63.7	0.6		19.4	72.2	8.3	0.1		16.6	19.9	63.3	0.2		28.8	69	2.1	0		
Total %	1.1	3.9	8.9	0.1	14	6.6	24.5	2.8	0	33.9	2.8	3.3	10.6	0	16.8	10.2	24.4	0.7	0	35.3	

Sabra, Wang & Associates

1504 Joh Avenue
Baltimore, MD 21227

File Name : Bay Ridge@Hillsmere_Weekday
Site Code : 00000000
Start Date : 5/18/2011
Page No : 2

	Bay Ridge Ave From North					Forest Dr From East					Hillsmere Rd From South					Forest Dr From West					
Start Time	Right	Thru	Left	Peds	App. Total	Right	Thru	Left	Peds	App. Total	Right	Thru	Left	Peds	App. Total	Right	Thru	Left	Peds	App. Total	Int. Total
Peak Hour Analysis From 07:45 AM to 11:45 AM - Peak 1 of 1																					
Peak Hour for Entire Intersection Begins at 07:45 AM																					
07:45 AM	7	**30**	62	0	99	**76**	**287**	17	0	**380**	8	21	78	0	107	73	153	7	0	233	819
08:00 AM	13	22	**68**	0	103	58	268	**48**	0	374	16	23	98	0	137	**112**	173	7	0	**292**	906
08:15 AM	18	24	50	0	92	58	228	31	0	317	**44**	**38**	**161**	0	**243**	99	**178**	7	0	284	**936**
08:30 AM	**21**	30	63	**1**	**115**	51	257	22	**1**	331	33	35	125	0	193	54	174	**12**	0	240	879
Total Volume	59	106	243	1	409	243	1040	118	1	1402	101	117	462	0	680	338	678	33	0	1049	3540
% App. Total	14.4	25.9	59.4	0.2		17.3	74.2	8.4	0.1		14.9	17.2	67.9	0		32.2	64.6	3.1	0		
PHF	.702	.883	.893	.250	.889	.799	.906	.615	.250	.922	.574	.770	.717	.000	.700	.754	.952	.688	.000	.898	.946

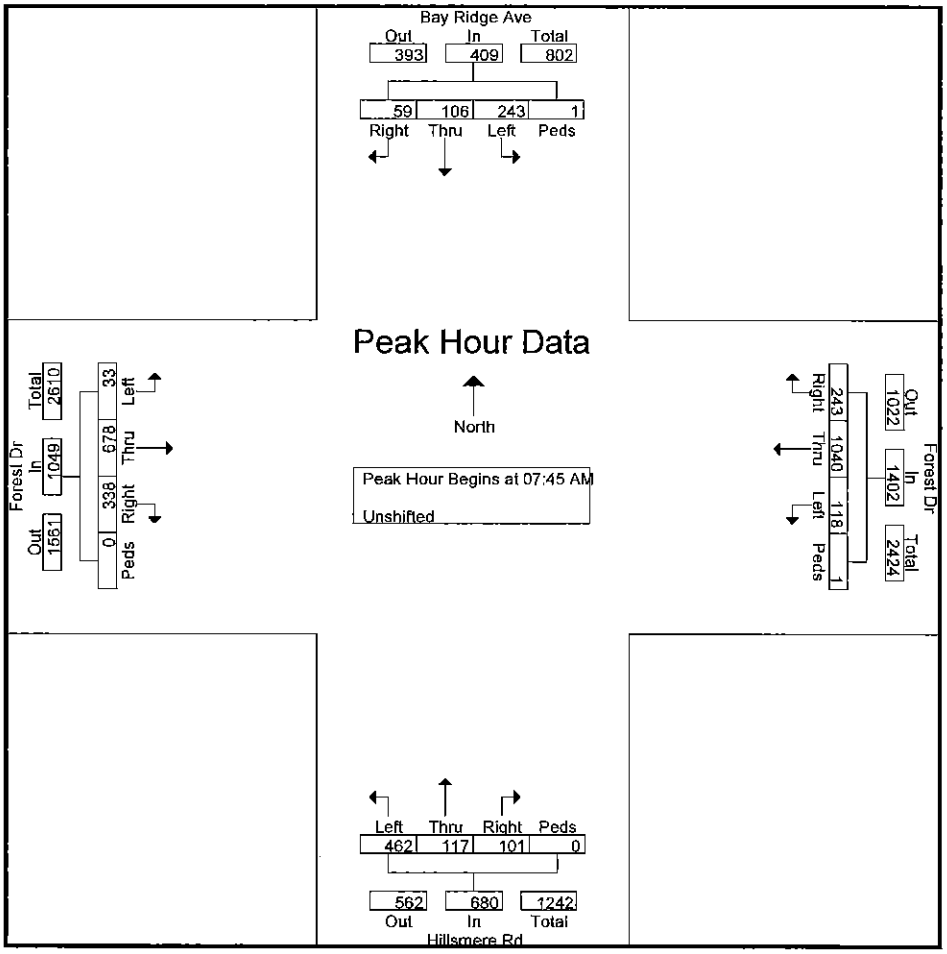

Sabra, Wang & Associates

1504 Joh Avenue
Baltimore, MD 21227

File Name : Bay Ridge@Hillsmere_Weekday
Site Code : 00000000
Start Date : 5/18/2011
Page No : 3

	Bay Ridge Ave From North					Forest Dr From East					Hillsmere Rd From South					Forest Dr From West					
Start Time	Right	Thru	Left	Peds	App. Total	Right	Thru	Left	Peds	App. Total	Right	Thru	Left	Peds	App. Total	Right	Thru	Left	Peds	App. Total	Int. Total
Peak Hour Analysis From 12:00 PM to 05:30 PM - Peak 1 of 1																					
Peak Hour for Entire Intersection Begins at 04:45 PM																					
04:45 PM	7	42	100	3	152	54	186	15	0	255	23	33	71	0	127	110	256	4	0	370	904
05:00 PM	6	52	100	1	159	72	174	26	2	274	33	24	87	0	144	124	252	8	1	385	962
05:15 PM	2	38	104	0	144	62	194	26	0	282	19	35	95	2	151	92	296	2	0	390	967
05:30 PM	5	43	94	1	143	44	171	18	0	233	25	32	53	1	111	71	276	7	0	354	841
Total Volume	20	175	398	5	598	232	725	85	2	1044	100	124	306	3	533	397	1080	21	1	1499	3674
% App. Total	3.3	29.3	66.6	0.8		22.2	69.4	8.1	0.2		18.8	23.3	57.4	0.6		26.5	72	1.4	0.1		
PHF	.714	.841	.957	.417	.940	.806	.934	.817	.250	.926	.758	.886	.805	.375	.882	.800	.912	.656	.250	.961	.950

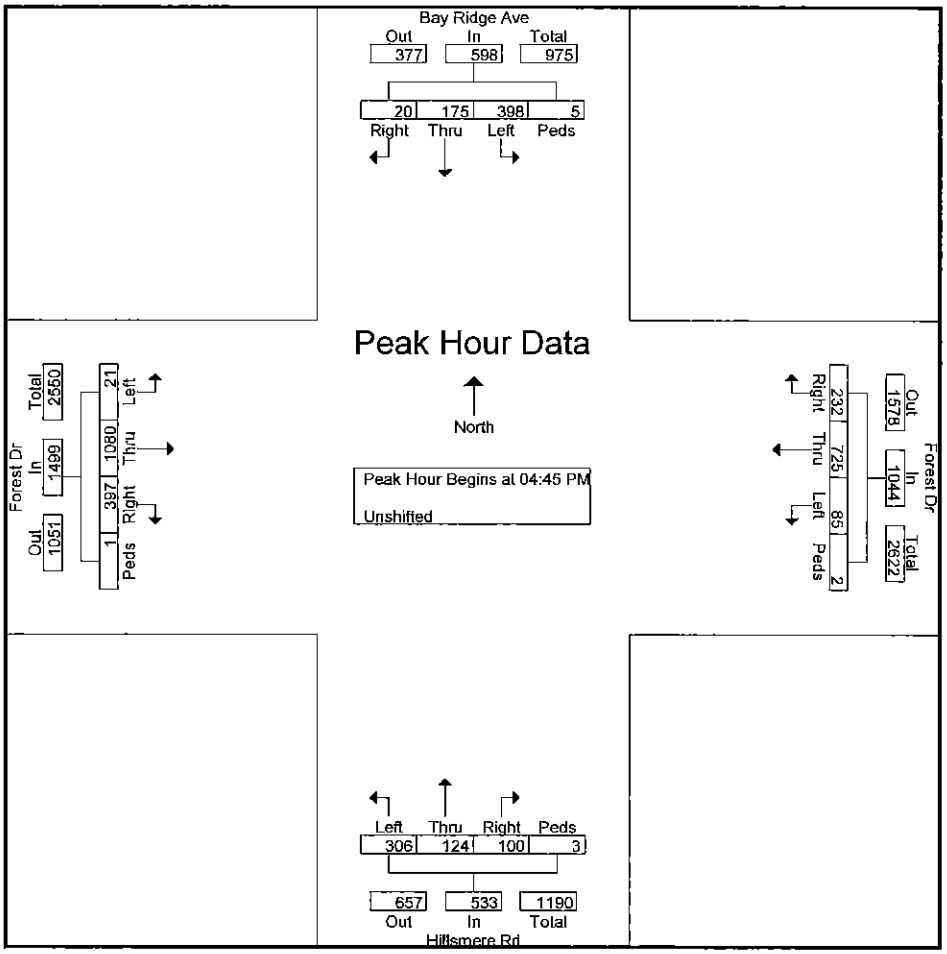

Sabra, Wang & Associates

1504 Joh Avenue
Baltimore, MD 21227

Weather: Clear
Counted By: SWA
Town: Annapolis
County: Anne Arundel

File Name : Bay Ridge@Hillsmere_SAT
Site Code : 00000000
Start Date : 5/21/2011
Page No : 1

Groups Printed- Unshifted

	Bay Ridge Ave From North					BAY RIDGE RD From East					HILLSMERE RD From South					Forest Dr From West					
Start Time	Right	Thru	Left	Peds	App. Total	Right	Thru	Left	Peds	App. Total	Right	Thru	Left	Peds	App. Total	Right	Thru	Left	Peds	App. Total	Int. Total
11:30 AM	7	39	73	0	119	44	224	34	6	308	37	19	138	1	195	87	180	11	0	278	900
11:45 AM	8	34	77	2	121	57	247	24	2	330	37	36	95	1	169	110	237	6	0	353	973
Total	15	73	150	2	240	101	471	58	8	638	74	55	233	2	364	197	417	17	0	631	1873
12:00 PM	7	34	85	0	126	61	250	27	2	340	36	45	97	1	179	95	218	10	1	324	969
12:15 PM	7	41	85	0	133	72	227	30	2	331	41	24	76	0	141	87	234	6	1	328	933
Grand Total	29	148	320	2	499	234	948	115	12	1309	151	124	406	3	684	379	869	33	2	1283	3775
Apprch %	5.8	29.7	64.1	0.4		17.9	72.4	8.8	0.9		22.1	18.1	59.4	0.4		29.5	67.7	2.6	0.2		
Total %	0.8	3.9	8.5	0.1	13.2	6.2	25.1	3	0.3	34.7	4	3.3	10.8	0.1	18.1	10	23	0.9	0.1	34	

Sabra, Wang & Associates

1504 Joh Avenue
Baltimore, MD 21227

File Name : Bay Ridge@Hillsmere_SAT
Site Code : 00000000
Start Date : 5/21/2011
Page No : 2

	Bay Ridge Ave From North					BAY RIDGE RD From East					HILLSMERE RD From South					Forest Dr From West					
Start Time	Right	Thru	Left	Peds	App. Total	Right	Thru	Left	Peds	App. Total	Right	Thru	Left	Peds	App. Total	Right	Thru	Left	Peds	App. Total	Int. Total
Peak Hour Analysis From 11:30 AM to 12:15 PM - Peak 1 of 1																					
Peak Hour for Entire Intersection Begins at 11:30 AM																					
11:30 AM	7	39	73	0	119	44	224	**34**	**6**	308	37	19	**138**	1	**195**	87	180	**11**	0	278	900
11:45 AM	**8**	34	77	**2**	121	57	247	24	2	330	37	36	95	1	169	**110**	**237**	6	0	**353**	**973**
12:00 PM	7	34	**85**	0	126	61	**250**	27	2	**340**	36	**45**	97	1	179	95	218	10	**1**	324	969
12:15 PM	7	41	85	0	**133**	**72**	227	30	2	331	**41**	24	76	0	141	87	234	6	**1**	328	933
Total Volume	29	148	320	2	499	234	948	115	12	1309	151	124	406	3	684	379	869	33	2	1283	3775
% App. Total	5.8	29.7	64.1	0.4		17.9	72.4	8.8	0.9		22.1	18.1	59.4	0.4		29.5	67.7	2.6	0.2		
PHF	.906	.902	.941	.250	.938	.813	.948	.846	.500	.963	.921	.689	.736	.750	.877	.861	.917	.750	.500	.909	.970

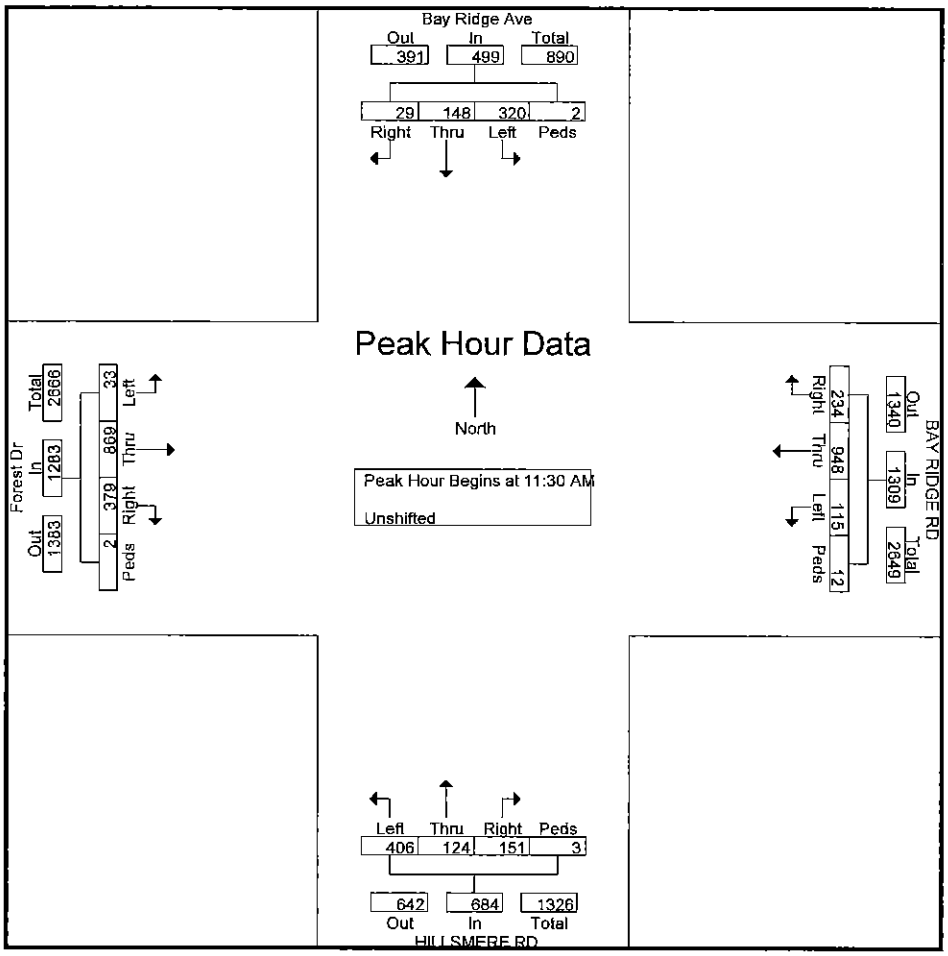

Count Comparison Table

Intersection Peak Hour Traffic Volume Count Comparison

McM - McMahon counts performed in February 2011
SWA - Sabra, Wang & Assoc. counts performed in May/June 2011

1- Forest Drive and Hilltop Lane

Time Period/	AM		PM		SAT	
Count Source	McM	SWA	McM	SWA	McM	SWA
SB T	1353	1258	1626	1886	1236	1273
SB L	602	578	707	839	407	501
NB T	2242	1950	1311	1318	1332	1319
NB R	7	8	14	20	5	18
WB R	815	750	844	951	556	496
Total	5019	4544	4502	5014	3536	3607
% Difference	-10%		10%		2%	

2-Forest Drive and Spa Road

Time Period/	AM		PM		SAT	
Count Source	McM	SWA	McM	SWA	McM	SWA
EB L	266	270	157	135	145	168
EB T	102	135	60	47	52	52
EB R	24	8	14	1	24	16
NB L	4	9	5	16	5	5
NB T	1543	1620	1165	1119	1059	1262
NB R	271	185	180	109	136	5
WB L	211	224	331	355	166	201
WB T	66	91	89	60	52	59
WB R	35	0	24	0	21	20
SB L	15	10	9	6	5	7
SB T	1091	1172	1408	1603	1082	1180
SB R	134	45	168	209	157	94
Total	3762	3769	3610	3660	2904	3069
% Difference	0.2%		1.4%		5.4%	

Intersection Peak Hour Traffic Volume Count Comparison

McM - McMahon counts performed in February 2011
SWA - Sabra, Wang & Assoc. counts performed in May/June 2011

3-Forest Drive and Gemini Drive

Time Period/	AM		PM		SAT	
Count Source	McM	SWA	McM	SWA	McM	SWA
EB L	0	1	0	0	0	0
EB T	0	0	0	0	0	0
EB R	0	0	0	1	0	0
NB L	0	9	1	0	2	0
NB T	1707	1780	1263	1218	1245	1386
NB R	6	1	23	18	35	26
WB L	22	22	31	25	37	39
WB T	1	0	0	0	0	0
WB R	100	132	71	73	92	87
SB L	72	79	128	126	116	114
SB T	1205	1199	1653	1682	1235	1323
SB R	1	4	0	0	0	0
Total	3114	3227	3170	3143	2762	2975
% Difference	3.5%		-0.9%		7.2%	

4-Forest Drive and Youngs Farm Road

Time Period/	AM		PM		SAT	
Count Source	McM	SWA	McM	SWA	McM	SWA
EB L	11	9	1	0	0	4
EB T	1	0	0	0	0	0
EB R	4	12	1	1	0	2
NB L	0	6	0	0	0	0
NB T	1979	1785	1317	1339	1333	1414
NB R	8	68	23	13	13	12
WB L	11	15	9	12	10	15
WB T	0	0	0	1	0	0
WB R	22	11	19	12	9	36
SB L	1	6	22	69	18	27
SB T	1278	1251	1749	1775	1280	1236
SB R	0	1	0	0	0	3
Total	3315	3164	3141	3222	2663	2749
% Difference	-4.8%		2.5%		3.1%	

Intersection Peak Hour Traffic Volume Count Comparison

McM - McMahon counts performed in February 2011
SWA - Sabra, Wang & Assoc. counts performed in May/June 2011

5-Forest Drive and Tyler Avenue

Time Period/	AM		PM		SAT	
Count Source	McM	SWA	McM	SWA	McM	SWA
EB L	37	39	50	25	53	49
EB T	6	20	15	7	12	15
EB R	16	10	11	13	12	9
NB L	11	8	18	14	12	23
NB T	1710	1514	1154	1115	1093	1367
NB R	18	7	25	15	28	28
WB L	17	24	35	28	27	28
WB T	12	7	15	10	12	10
WB R	148	101	88	66	82	86
SB L	99	121	117	70	84	89
SB T	1176	983	1550	1532	1047	1170
SB R	33	19	59	19	49	52
Total	3283	2853	3137	2914	2511	2926
% Difference	**-15.1%**		**-7.7%**		**14.2%**	

6-Forest Drive and Hillsmere Drive and Bay Ridge Road

Time Period/	AM		PM		SAT	
Count Source	McM	SWA	McM	SWA	McM	SWA
EB L	438	462	309	306	295	406
EB T	138	117	132	124	82	124
EB R	111	101	133	100	117	151
NB L	134	118	109	85	98	115
NB T	1124	1040	665	725	695	948
NB R	339	243	270	232	267	234
WB L	208	243	428	398	325	320
WB T	73	106	177	175	125	148
WB R	10	59	22	20	38	29
SB L	17	33	22	21	28	33
SB T	651	678	965	1080	642	869
SB R	379	338	422	397	241	379
Total	3622	3538	3654	3663	2953	3756
% Difference	**-2.4%**		**0.2%**		**21.4%**	